FILE NO.

SERVICE MANUAL

FISHER

TAD G60

(DE)

Mini Component System

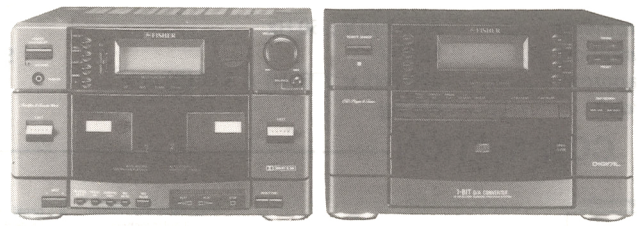

Contents

SPECIFICATION 1
SYSTEM CONNECTION 1
OPERATING THE RESET SWITCH 2
PARTS LIST(PACK & ACCESSORIES) 2
PARTS LIST(REMOCON) 2

CD / TUNER UNIT
TUNER ADJUSTMENT 3
LASER BEAM SAFETY PRECAUTION 4
CD MECHANISM REMOVAL 5
CD SERVICE MODE 9
CD ADJUSTMENT 12
PARTS LIST 14
EXPLODED VIEW(CABINET & CHASSIS) 17
EXPLODED VIEW(CD MECHANISM) 18
PARTS LIST(CD MECHANISM) 19
IC BLOCK DIAGRAM 20
LCD BLOCK DIAGRAM 26
CD VOLTAGE TABLE 27
SCHEMATIC DIAGRAM(FRONT) 30
CONNECTION DIAGRAM 32
SCHEMATIC DIAGRAM(CD) 34
WIRING DIAGRAM(CD) 36

PRODUCT CODE No.
129 401 03

SCHEMATIC DIAGRAM(TUNER) 38
WIRING DIAGRAM(TUNER & FRONT) 40
BLOCK DIAGRAM(CD) 42

TAPE DECK / AMPLIFIER UNIT
DECK ADJUSTMENT 43
EXPLODED VIEW(CABINET & CHASSIS) 45
PARTS LIST 46
PARTS LIST(TAPE MECHANISM) 52
EXPLODED VIEW(TAPE MECHANISM) 53
IC BLOCK DIAGRAM 54
LCD BLOCK DIAGRAM 59
SCHEMATIC DIAGRAM(TAPE DECK AMP) 60
WIRING DIAGRAM(TAPE DECK AMP) 62
SCHEMATIC DIAGRAM(PRE-AMP) 64
WIRING DIAGRAM(PRE-AMP & FRONT) 66
SCHEMATIC DIAGRAM(SYSCON & MAIN AMP) 68
WIRING DIAGRAM(MAIN AMP) 70
CONNECTION DIAGRAM 72
BLOCK DIAGRAM(TAPE DECK & FRONT) 74
BLOCK DIAGRAM(PRE & MAIN AMP) 75
SCHEMATIC DIAGRAM(FRONT) 76
SCHEMATIC DIAGRAM(TAPE MECHANISM) ... 77

"Dolby" and the double-D symbol ⧈ are trademark of Dolby Laboratories Licensing Corporation.Dolby Noise Reduction system is manufactured under license from Dolby Laboratories Licensing Corporation.

This Service manual is consist of "REM M30", "TUP G60", "CAC G60".

REFERENCE No. SM580071

SPECIFICATION

Note : The below mentioned specifications are mainly based on the IHF measurements standard. They can therefore not directly be compared with specifications based on the DIN standard or other standards.

CASSETTE DECK / AMPLIFIER UNIT (CAC G60)

Cassette decks

Track system	4-track, 2-channel stereo
Frequency response	Chrome tapes: 40 - 13,500 Hz Normal tapes : 40 - 12,500 Hz
Signal to noise ratio	60 dB(with DOLBY NR : ON)
Wow and flutter	0.14% (WRMS)
Fast forward / rewind time	Approx. 120 sec. (C-60)

Amplifier

Output power	40 W x 2 (at 8 ohms, 0.9% distortion)
Graphic equalizer	7 band electronic
Spectrum analyzer	7 band
Inputs	PHONO : 2.5 mV / 50k ohms VIDEO : 250 mV / 50k ohms
Outputs	SUPER WOOFER OUT : 600 mV SPEAKERS : 8 ohms PHONES : 8 ohms

General

Power requirements	AC : 230 V , 50 Hz
Power consumption	100 W
Dimensions(approx.)	270 (W) x 178 (H) x 317 (D) mm
Weight(approx.)	6.4 kg

TUNER / TIMER / CD PLAYER UNIT (TUP G60)

Tuner

Reception frequency	FM : 87.5 - 108 MHz MW : 522 - 1,611 kHz LW : 144 - 290 kHz

CD player

Channels	2-channel stereo
Sampling frequency	44.1 kHz
Pick-up	Optical 3-beam semiconductor laser
Frequency response	20 - 20,000 Hz
Wow and flutter	Below measurable limits

General

Dimensions(approx.)	270 (W) x 178 (H) x 278 (D) mm
Weight(approx.)	2.9 kg

REMOTE CONTROLLER (REM M30)

Power requirements	DC : 3V "R03 / AAA / UM-4" Battery x 2
Dimensions(approx.)	58 (W) x 18 (D) x 186 (H) mm

Specification subject to change without notice.

SYSTEM CONNECTION

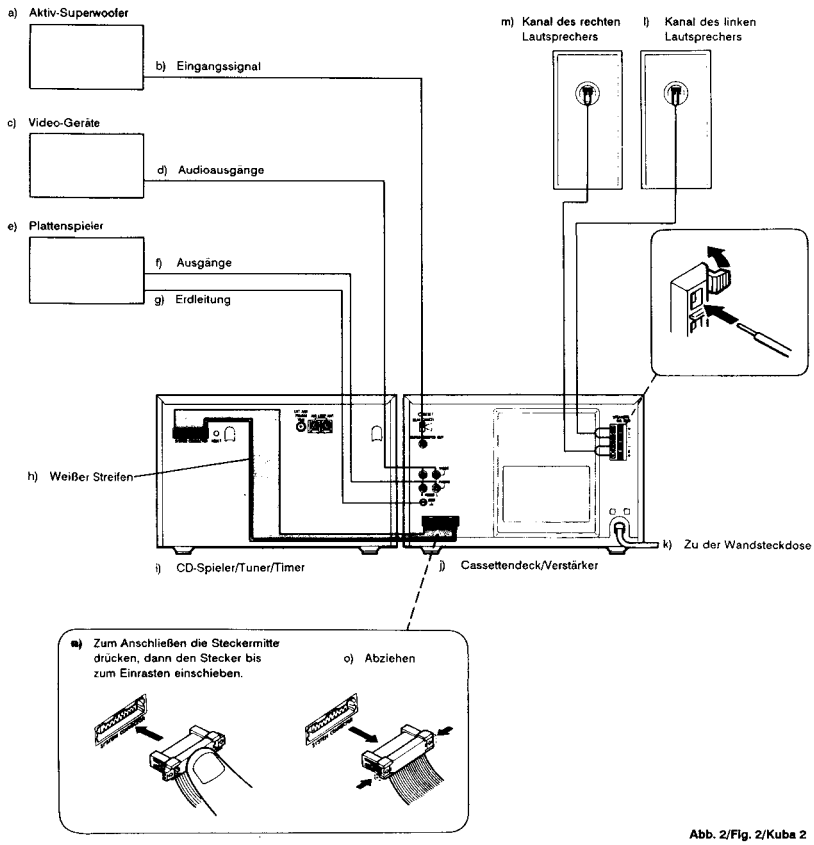

Abb. 2/Fig. 2/Kuba 2

Hinweis:
Das Netzkabel darf erst dann an eine Wandsteckdose angeschlossen werden, nachdem alle anderen Anschlüsse vorgenommen wurden.

Das System ist erst dann vom Netz getrennt, nachdem das Netzkabel aus der Wandsteckdose herausgezogen wurde.

Lautsprecher
Beim Anschließen der Lautsprecher unbedingt auf die korrekte Polarität ("+" und "–") achten. Bei vertauschter Polarität fehlt dem Klang im Baßbereich unter Umständen Tiefe und Stabilität.

Kopfhörer
Stereo-Kopfhörer (8 Ohm bis 10 kOhm; die Kopfhörer sind als Sonderausstattung erhältlich) können an der PHONES-Steckbuchse zur Klangüberwachung und ungestörtem Hören angeschlossen werden. Durch den Anschluß der Kopfhörer wird die Wiedergabe über die Lautsprecher automatisch unterbrochen.

Hinweis:
Vor dem Anschluß von externen Zusatzgeräten beziehen Sie sich bitte auf die bei diesen Geräten mitgelieferten Bedienungsanweisungen.

Antennen (Abb. 3)
In Gebieten mit normaler Empfangslage reicht die mitgelieferte einfache Zimmerantenne im allgemeinen aus, um einen einwandfreien Empfang zu gewährleisten. Dehnen Sie die Antenne so gerade wie möglich aus, kontrollieren Sie die Empfangsqualität, während Sie die Ausrichtung der Antenne verändern, und befestigen Sie die Antenne in der Lage, in der möglichst wenig Rauschen und Verzerrung auftritt.
In Gebieten mit schwieriger Empfangslage, oder bei verzerrten und verrauschten Sendesignalen, empfiehlt es sich, anstatt der Zimmerantenne eine Außenantenne aufzustellen (Sonderausstattung). In diesem Falle ziehen Sie Ihren Fachhändler zu Rate.

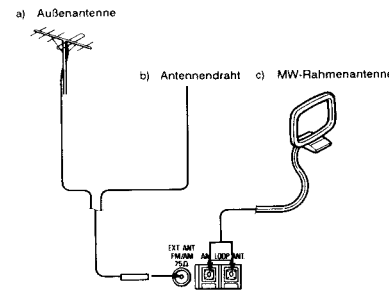

Abb. 3/Fig. 3/Kuba 3

MW-Rahmenantenne
Die Rahmenantenne wie in Abb. 4 gezeigt zusammenbauen. Wickeln Sie den Antennendraht ab (ca. 3 Umdrehungen), und schließen Sie den Draht dann an die AM LOOP ANT-Klemmen an.
Ermitteln Sie die Lage der Rahmenantenne, die einen optimalen MW-Empfang gewährleistet; der Antennenhalter kann auch an der Wand o.ä. befestigt werden, wie in der Abbildung 5 gezeigt.

Abb. 4/Fig. 4/Kuba 4

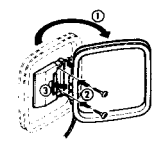

Abb. 5/Fig. 5/Kuba 5

Hinweis:
Um Empfangsstörungen zu vermeiden, dürfen Lautsprecher, Flachkabel und andere Zuleitungskabel nicht in der Nähe der Innen- bzw. Außenantenne sowie der Rahmenantenne verlegt werden. Verlegen Sie das Antennenkabel nicht in der Nähe der Anlage.

OPERATING THE RESET SWITCH

This CD / TUNER and TAPE DECK / PRE-AMPLIFIER unit is provided with a reset switch on the rear panel. The reset switch serves to initialize the microprocessor in the each units which controls the CD, TUNER, TAPE DECK and etc block. If the unit is to be serviced or key input is not acknowledged even when the CD / TUNER, TAPE DECK and etc. operation buttons are pressed, press the RESET switch and initialize the microprocessor following the step below.

1). Disconnect the AC power cord from the power outlet.
2). Keep the RESET switch depressed for 60 seconds.
(The backed up electrolytic capacitor is discharged by keeping the RESET switch depress.)
3). Reconnect the AC power cord to the power outlet.
4). Press the CD / TUNER, TAPE DECK and etc. operations, and check their operation.

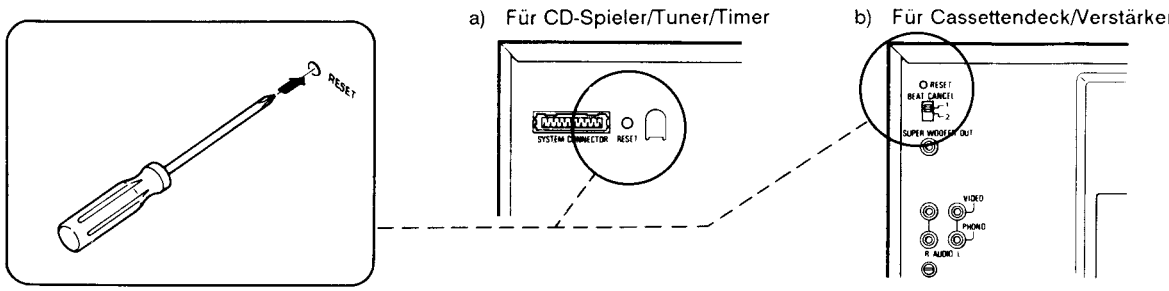

PARTS LIST

PRODUCT SAFETY NOTICE

Each precaution in this manual should be followed during servicing. Components identified with the IEC symbol ⚠ in the parts list and the schematic diagram designate components in which safety can be of special significance. When replacing a component identified ⚠, use only the replacement parts designated, or parts with the same ratings of resistance, wattage or voltage that are designated in the parts list in this manual. Leakage-current or resistance measurements must be made to determine that exposed parts are acceptably insulated from the supply circuit before returning the product to the customer.

CAUTION: Regular type resistors and capacitors are not listed. To know those values, refer to the schematic diagram.
N.S.P : Not available as service parts.

PACKING

Ref. No.	Part No.	Description
	614 247 4105	INNER CARTON
	614 246 7176	PAD,TOP
	614 246 7183	PAD,BOTTOM
	614 246 8876	SHEET,CT UNIT
	614 239 1785	SHEET,CD TRAY
	614 236 8876	SHEET,DA UNIT
	614 244 0261	INNER POLYE COVER,CT UNIT
	614 244 0261	INNER POLYE COVER,DA UNIT
	614 236 0132	POLY COVER,REMOCON
	614 244 0247	INNER POLYE COVER, INST & ACCESSORY
	614 176 1039	INNER POLYE COVER,SCREW
	614 231 6832	LABEL,SAFETY,LASER

ACCESSORIES

Ref. No.	Part No.	Description
	614 244 3842	INSTRUCTION MANUAL
	614 023 7344	ANTENNA,FM
or	614 229 4635	ANTENNA,FM
	614 234 5511	LOOP ANTENNA,AM
	411 083 9307	SCR WOOD RND 3.1X13,AM ANT
	614 239 5288	ASSY,CONNECTOR-P,19P, CD/TUNER - DECK/AMP UNIT

REMOTE CONTROLLER UNIT

PARTS LIST

REMOCON (REM M30)

Ref. No.	Part No.	Description
	614 243 8169	ASSY,REMOCON
	614 235 9433	LID,BATTERY

ADJUSTMENT (TUNER)

- Use a plastic screwdriver for adjustment.
- Adjust the intermediate frequency of AM and FM to the frequency of ceramic filter.

1. FM BAND

SG RF Level : 75 ohm Open voltage dBμV

Antenna : 75 ohm Direct, Modulation : 1kHz, Dev. : ±75kHz (mono) · ±40kHz (main) · ±6.75kHz(pilot)

STEP	ITEMS	TUNING FREQUENCY	INPUT CONDITION		OUTPUT CONDITION		PARTS	STANDARDS
			MEASURE	INPUT	MEASURE	OUTPUT		
1	COVER	87.5MHz 108.0MHz	------	------	Digital Voltmeter	TP202(H) TP201(E)	------ ------	Confirm 1.4~1.6V Confirm ≤ 8.5V (about 7.8V)
2	IF(0V)	98.0MHz	FM SG (66dB)	TP211(H) TP212(E)	Digital Voltmeter	TP203(H) #TP204(E)	T2202	0 ± 0.05V
3	VCO	98.0MHz	FM SG (66dB)	TP211(H) TP212(E)	Frequency Counter	TP206(H) TP207(E)	SVR23	##19KHz ± 50Hz

: TP204 is no earth point. ## : Adjust in the modulation off Tuner Mode : AUTO STEREO

2. MW BAND

Antenna : IRE Loop, Modulation : 1kHz 30% SG RF Level : 75 ohm Open voltage dBμV

STEP	ITEMS	TUNING FREQUENCY	INPUT CONDITION		OUTPUT CONDITION		PARTS	STANDARDS
			MEASURE	INPUT	MEASURE	OUTPUT		
1	COVER	522kHz 1611kHz	------	------	Digital Voltmeter	TP202(H) TP201(E)	L2153 ------	Confirm 1.0 ~ 1.4V Confirm ≤ 8.5V (about 7.2V)
2	TRACKING	603kHz 1404kHz	AM SG (about 80dB)	LOOP ANT	VTVM Oscilloscope	TP233(L) TP234(R) TP235(E)	L2152 CT252	Output : Maximum Confirm to near the effective sensitivity.

3. LW BAND

STEP	ITEMS	TUNING FREQUENCY	INPUT CONDITION		OUTPUT CONDITION		PARTS	STANDARDS
			MEASURE	INPUT	MEASURE	OUTPUT		
1	COVER	144kHz 290kHz	------	------	Digital Voltmeter	TP202(H) TP201(E)	L2154 ------	Confirm 1.3 ~ 1.8V Confirm ≤ 8.5V (about 6.5V)
2	TRACKING	162kHz 279kHz	AM SG (about 80dB)	LOOP ANT	VTVM Oscilloscope	TP233(L) TP234(R) TP235(E)	L2151 CT251	Output : Maximum Confirm to near the effective sensitivity.

4. PARTS LOCATION

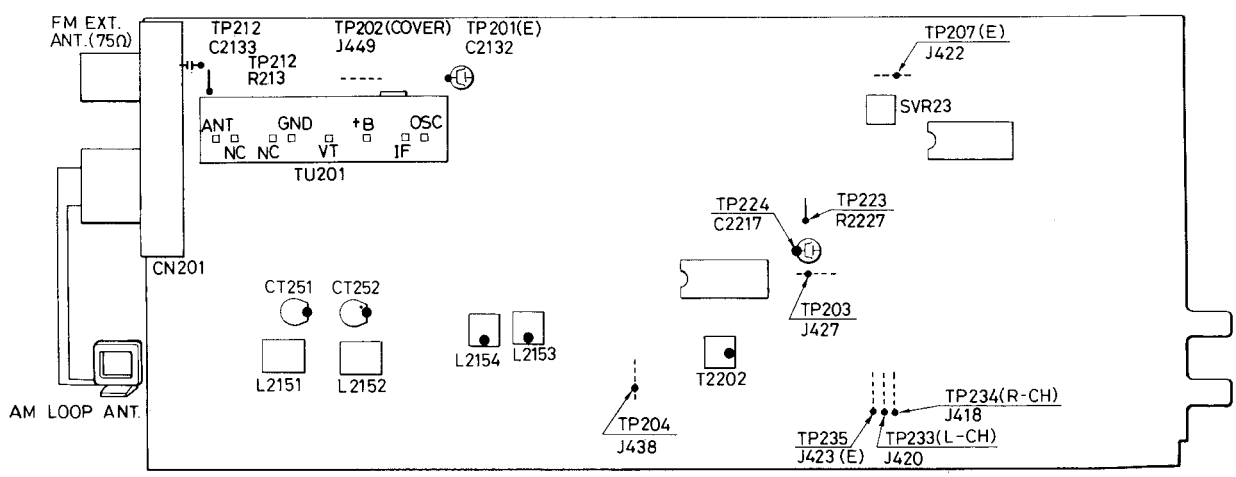

LASER BEAM SAFETY PRECAUTIONS (CD)

Do not look straight at the laser beam from the pickup and do not point the beam at your fingers or any other part of your body.

Note: The laser beam must never be allowed to enter the eyes since this may damage the eyes.

Power must never be supplied to a pickup with a damaged laser output part (objective lens, etc.).

Structural Safety Interlock

This model has a disc chuck lever and top lid. This disc chuck lever and top lid prevent to expose the laser beam for users.

INVISIBLE LASER RADIATION EXPOSURE TO BEAM IS DANGEROUS CLASS 1 LASER PRODUCT
OUTPUT POWER : 0.6 mW MAX WAVELENGTH : 790 nm

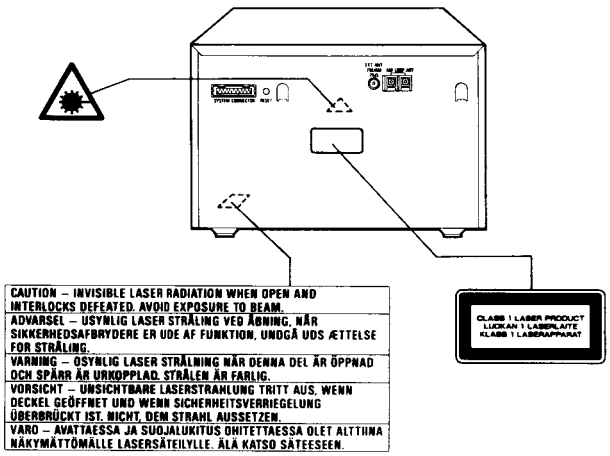

ACHTUNG - WENN ANDERE ALS DIE HIER BESCHRIEBENEN BEDIENUNGS- ODER JUSTIEREINRICHTUNGEN BENÜTZT ODER ANDERE ARBEITEN AUSGEFÜHRT WERDEN, KANN DIES ZU GEFÄHRLICHER STRAHLUNGSEINWIRKUNG FÜHREN.

ATTENTION - L'EMPLOI D'ORGANES DE COMMANDE OU DE RÉGLAGE, OU L'EXÉCUTION DE PROCÉDURES, AUTRES QUE CEUX SPÉCIFIÉS DANS LE MODE D'EMPLOI, PEUT PROVOQUER UNE EXPOSITION DANGEREUSE AU RAYONNEMENT.

CAUTION - USE OF CONTROLS OR ADJUSTMENTS OR PERFORMANCE OF PROCEDURES OTHER THAN THOSE SPECIFIED HEREIN MAY RESULT IN HAZARDOUS RADIATION EXPOSURE.

VARNING! OM APPARATEN ANVÄNDS PÅ ANNAT SÄTT ÄN VAD SOM BESKRIV I DENNA BRUKSANVISNING, KAN ANVÄNDARE UTSÄTTAS FÖR OSYNLIG LASERSTRÅLNING, SOM ÖVERSKRIDER GRÄNSEN FÖR LASERKLASS 1.

OPGELET - HET GEBRUIK VAN REGELAARS OF HET MAKEN VAN AFSTELLINGEN E.D. DIE NIET IN DEZE GEBRUIKSAANWIJZING ZIJN BESCHREVEN KAN LEIDEN TOT SCHADELIJKE STRALINGEN.

CAUTELA - L'USO DI COMANDI, AGGIUSTAMENTI O PROCEDIMENTI DIVERSO DA QUELLO QUI SPECIFICATO PUÒ DAR LUOGO AD ESPOSIZIONE A RADIAZIONI PERICOLOSE.

VAROITUS! LAITTEEN KÄYTTÄMINEN MUULLA KUIN TÄSSÄ KÄYTTÖOHJEESSA MAINITULLA TAVALLA SAATTAA ALTISTA KÄYTTÄJÄN TURVALLISUUSLUOKAN 1 YLITTÄVÄLLE NÄKYMÄTTÖMÄLLE LASERSÄTEIYLLE.

PRECAUCION: EL USO DE CONTROLES O AJUSTES, O PROCEDIMIENTOS DE OPERACION DIFERENTES DE LOS ESPECIFICADOS EN ESTE DOCUMENTO RESULTARAN EN EXPOSICION PELIGROSA A LA RADIACION.

ATTENZIONE: L'USO DI CONTROLLI, REGOLAZIONI O PROCEDURE DIVERSI DA QUELLI SPECIFICATI IN QUESTO MANUALLE PUÒ RISULTARE IN PERICOLOSE ESPOSIZIONI A RADIAZIONI.

1. Precautions for handling the pickup and semiconductors (particularly the ICs)

a. The pickup and semiconductors (particularly the ICs) may be damaged if they come into contact with a source of high voltage static electricity. Do not bring them, therefore, into contact with or into the vicinity of anything which has been charged with high voltage static.

b. The pickup consists of a large number of optical and precision parts. Do not store or repair it, therefore, in any location with a high temperature, high humidity, high magnetic fields or high dust concentration. (Since the pickup contains a powerful magnet, it must not be brought near any magnetized objects.)

c. Do not apply strong external pressure to the pickup or subject it to impact. Actions like these can cause the printed circuit board to crack or malfunctioning to occur.

d. The pickup is a single integrated part which has been very precisely adjusted. Therefore, its adjustment points and set screws must not be touched.

2. How to prevent static during handling

a. When replacing any of the parts, disconnect the power plug from the unit being repaired.

b. All measuring instruments, tools and repair equipment must be grounded. Cover the work bench where the repair work will be done with a grounded electrically conductive sheet.

c. Ground the metal part of the soldering iron in order to safeguard against leakage of electricity from the heater.

d. Repair personnel must wear grounding bands around their wrists to discharge static picked up by their bodies. These bands are grounded through a resistor (with a 1MΩ resistance).

Note: Under no circumstances must be the grounding bands be grounded without a resistor (with a 1MΩ resistance) since doing so involves the risk of electric shocks.

Since static in the clothes of the repair personnel will not be discharged by wearing grounding bands, every care must be taken not to allow the clothes to touch the pickup and semiconductors (particularly the ICs).

e. The pickup, which is a single integrated part, is kept in a conductive bag. Use this bag to convey the pickup from one place to another. In order to avoid damage resulting from static which may occur when the pickup is removed from the bag, make sure that it is not placed on top of the bag.

3. Cleaning the lens surface

a. Blow off dust on the lens using the kind of air brush which is used for cameras.

b. Remove stubborn dirt with a cotton swab dipped in isopropyl alcohol. Do not use any other type of cleaning fluid since it may mark the plastic lens.

Notes:
- Do not use too much isopropyl alcohol: the excess may seep inside the pickup.
- The lens is held in place by a very feeble support spring. Therefore, when cleaning the lens, avoid applying any more force by the cotton swab than is necessary since this may bend the support spring out of shape.

CD MECHANISM REMOVAL

1) Preparations

1) Do not apply unnecessary force to the pickup when handling it. Care should be taken not even to touch the lens or drive circuit sections.
2) Do not apply unnecessary force (do not pull or push it forcefully) to remove the disc tray from its inside position. Unnecessary force may break the teeth on the tray gear (CM6).
3) In the descriptions which follow, the numbers in the parentheses after the parts are reference numbers in the exploded views. Refer to these views.

2) Removing and installing the disc tray

1) Remove the stop screw (Y1) of the disc tray (31). (①)
2) Pull the disc tray (31) all the way forward by turning the tray drive gear (CM12) clockwise. (②)
   Note: Do not take hold of the disc tray (31) and pull it out by force.
3) Push the catch on the disc tray (31) in the direction shown by the arrow, and draw out the disc tray (31). (③)
4) To install the disc tray, turn the gear (CM12) in the direction of the arrow as far as it will go. (②)
5) Align the disc tray (31) with the mechanism chassis (CM39). Adjusting second tooth of the tray move gear (CM3). (④)
6) Push the disc tray (31) toward the rear, and interlock it with the tray drive gear (CM12) as shown in Fig.④ .
7) Secure it with the screw (Y1) which was removed in step 1).

DISC TRAY REPLACEMENT

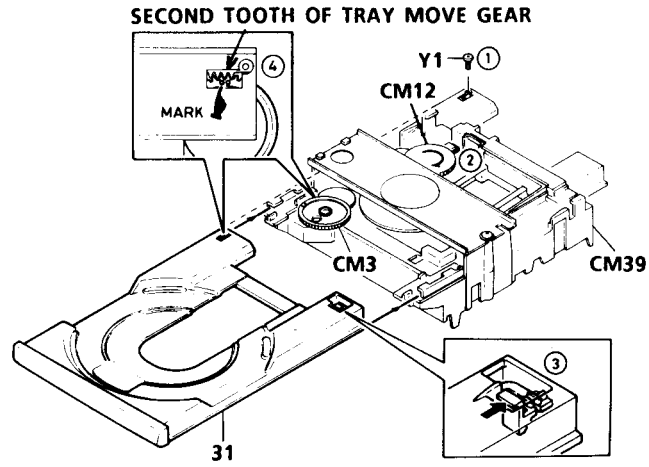

3) Disassembling the mechanism

(1) Removing the pickup block

1) Remove the disc tray (31). (Refer to steps 1), 2) and 3) of the section entitled "Removing and installing the disc tray.")
2) Turn the tray drive gear (CM12) counterclockwise (①), and move the pickup in the direction of arrow (②) as far as it will go.
3) Remove the spring wire (CM44) with tweezers. (③)
4) Remove the screw (CM11), and also remove the tray drive gear (CM12) and washer (CM13). (④)
5) Now remove the pick rack gears (CM16 and CM19).
   Note: It will not be possible to remove the pick rack gears (CM16 and CM19) unless the pickup has been moved all the way in the direction of arrow (②).
6) The pickup block can now be removed by taking out the screw (CM51) and spring coil (CM49).
   Note: If the timing gear (CM23) is in the state shown by "X" in the figure on the right, put it in the state shown by "○".

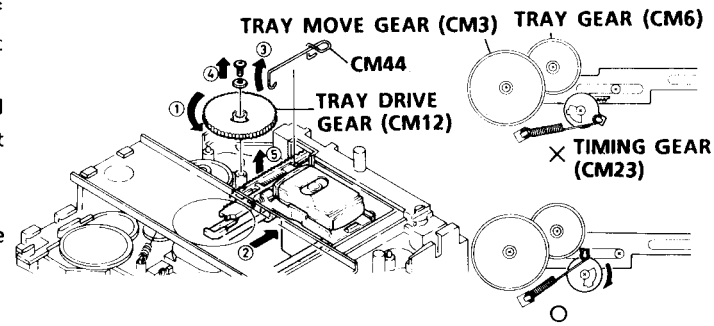

MECHANISM REMOVAL (CD)

(2) Replacing and lubricating the pickup

1) Pull out the two pickup rails (CM43) from the chassis (CM50).
2) The pickup (CM52) can now be removed once the two pick-up rails (CM43) have been taken out.
3) When the pickup has been replaced, be sure to wipe the two pickup rails (CM43) cleanly and apply grease (FLOIL G-474B) around the entire circumference of the rails and along their entire length.
4) Pass the two pickup rails (CM43) through the new pickup (CM52), insert them into the chassis (CM50), and fix them in place at an angle of 45° as shown in the figure.

Notes: a. When applying the grease, do not allow any grease to adhere to any other parts.

b. If a part (indicated by the dots in the figure) of the chassis (CM50) is damaged in the process of removing or inserting the two pickup rails (CM43) from or into the chassis (CM50), wipe the damaged area with a cloth dipped in alcohol (normal hexane), and bond it together using a bonding agent (Cemedine #575).

(3) Replacing the loading/sled motor

1) The loading/sled motor (CM38) can be removed from the chassis (CM39) once the screw (CM24) securing the motor (CM38) is removed.
2) Mount the new loading/sled motor (CM38) onto the chassis (CM39) using the screw (CM24).

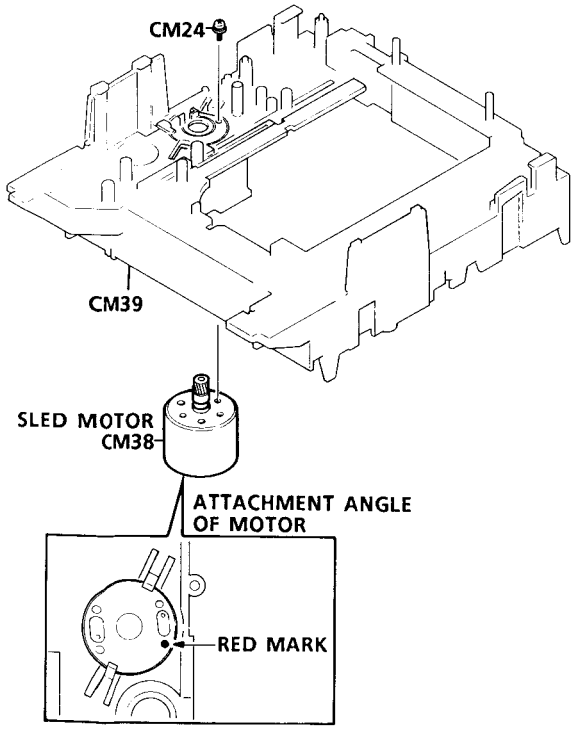

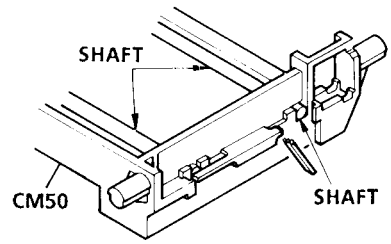

FIX BY THE CEMEDINE #575

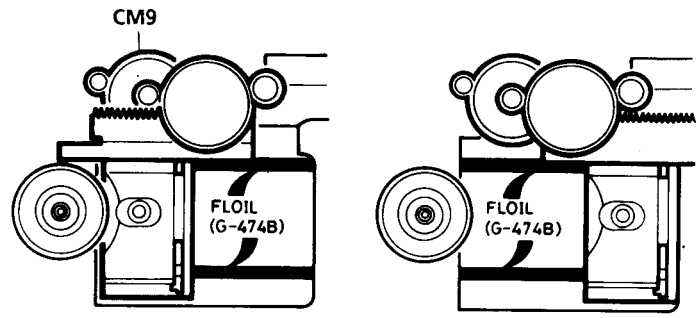

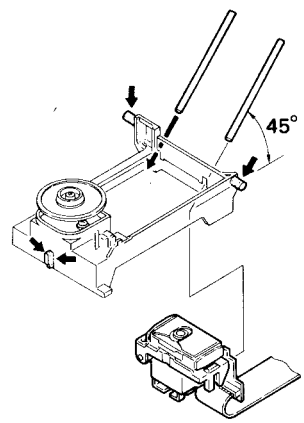

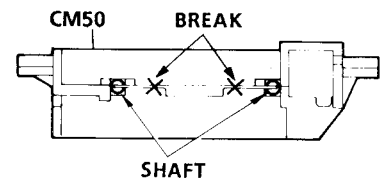

(4) Checking the loading/sled motor's operation

1) As shown in the figure, connect an ammeter and a DC power supply to the loading/sled motor (CM38), and set the tray open and end switches to the "off" [open] positions.
2) Check that the pickup (CM52) moves smoothly without stopping from the inner circumference of the compact disc toward its outer circumference when a DC 0.6V voltage is applied from the DC power supply.
3) The disc tray is housed inside and the gear (CM9) slips when a DC 4V voltage is applied from the DC power supply. Check that the ammeter indicates 120mA or more at this time.

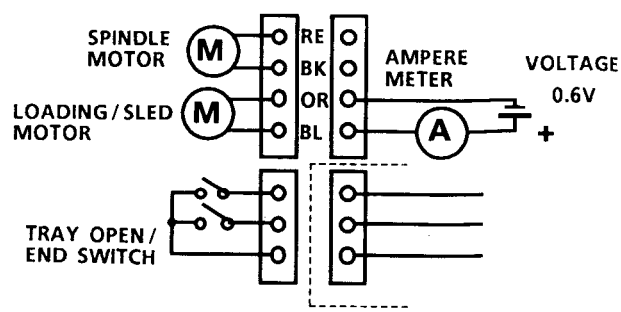

4) Check points for CD mechanism assembly and lubrication

(1) Lubricating and mounting the tray slide

1) Apply grease (FLOIL G-474B) to the area indicated by the diagonal in the figure.
2) When inserting the tray slide (CM15), set the position where it is installed vis-a-vis the base/tray timing gear (CM20) as shown in the figure.

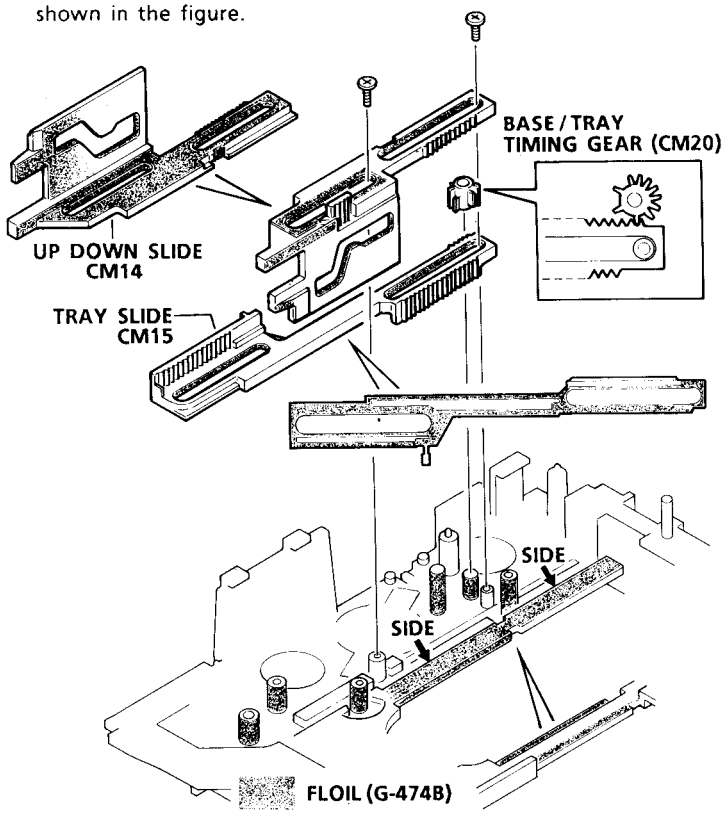

(2) Installing the tray gear

1) Move the tray slide (CM15) in the direction of the arrow ①.
2) Engage the gear section of the tray slide (CM15) with the inner gear of the tray gear (CM6) at the center line, as shown in the figure.
3) Align the tray move gear (CM3) with the position (○) of the hole in the outer gear of the tray gear (CM6) and engage the tray move gear (CM3), as shown in the figure.

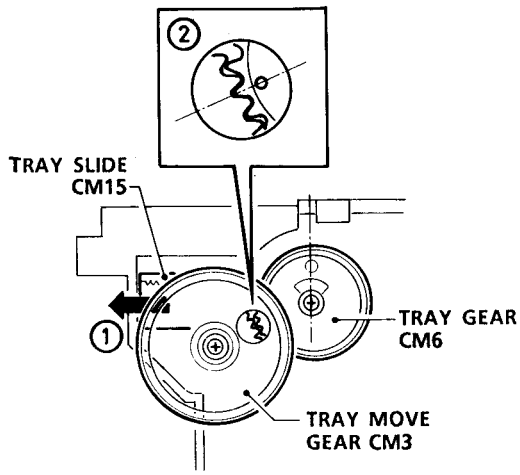

(3) Installing the base up/down slide and timing gear

1) Move the base up/down slide (CM14) in the direction of the arrow ①, and set the gears at the positions shown in the figure.
2) Insert the timing gear (CM23), and mount it using the screw (CM21).
3) Turn the timing gear (CM23) counterclockwise.

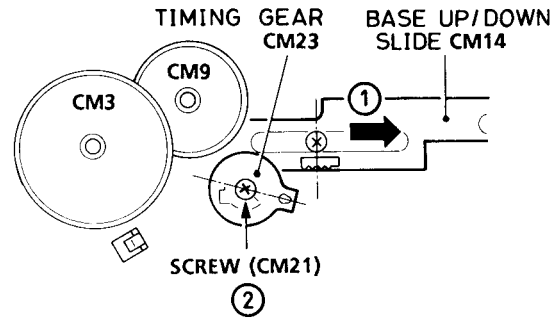

4) Hook the gear tension spring (CM22) onto the timing gear (CM23).

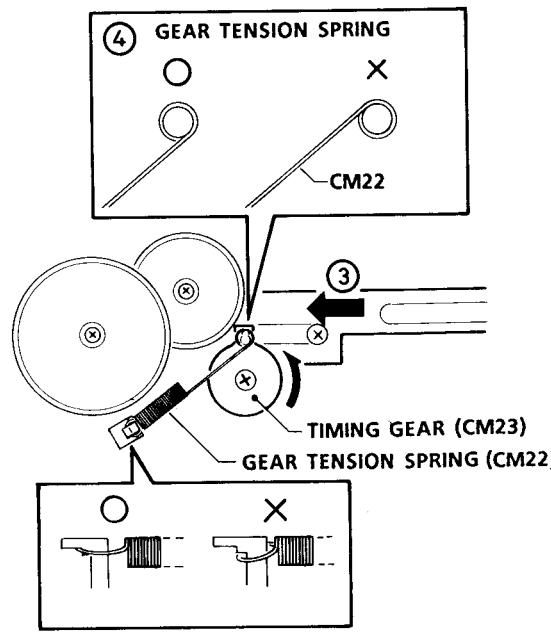

MECHANISM REMOVAL (CD)

(4) Lubricating the base lever

Apply grease (FLOIL G-474B) to the ▒ area in the figure.

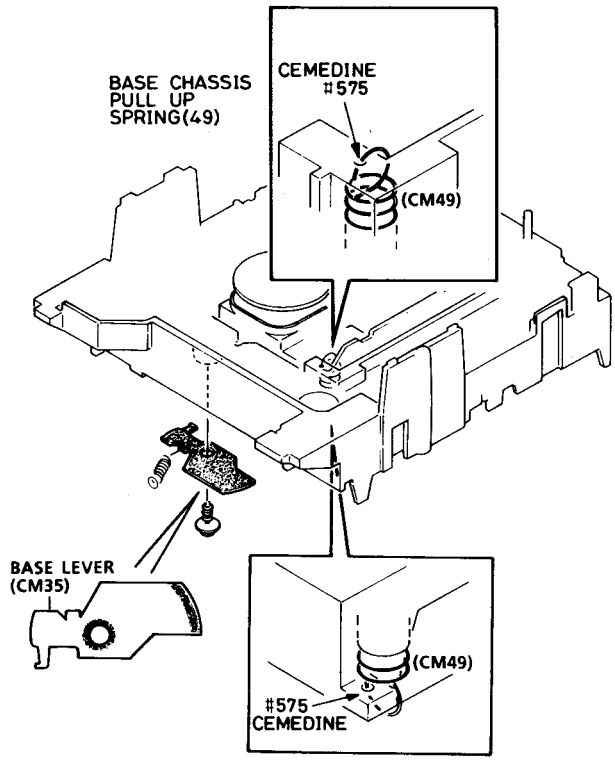

(5) Lubricating the pickup sled gear and clutch gear

1) Apply grease (FLOIL G-474B) around the entire circumference of the lower gear of the pickup sled gear (CM12), as shown in the figure (▒ area).
2) Apply grease (G-333) around the entire circumference of the outer clutch gear (CM9).
3) Apply grease (FLOIL G-474B) to the ▒ part of the outer clutch gear (CM9) where it makes contact with the inner clutch gear (CM8).

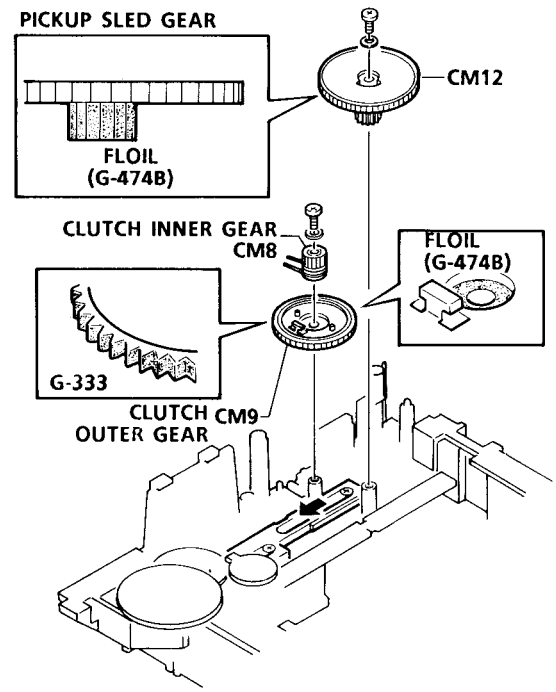

(6) Arranging and securing the leads

1) As shown in the figure, set the pickup (CM52) at a position on the innermost circumference of the compact disc, and pass the leads from the pickup (CM52) and spindle motor (CM48) through pin (a) of the chassis (CM39). Arrange the leads from the loading/sled motor (CM38) and sensor switch (micro switch) (CM26) by passing them through point (b) in the chassis (CM39). After securing the leads with the lug (CM41), check that the pickup (CM52) moves smoothly without the leads interfering with its movement.
2) If no problems arise in the ① check, secure the points shown in the figure using a bonding agent (Cemedine #575).

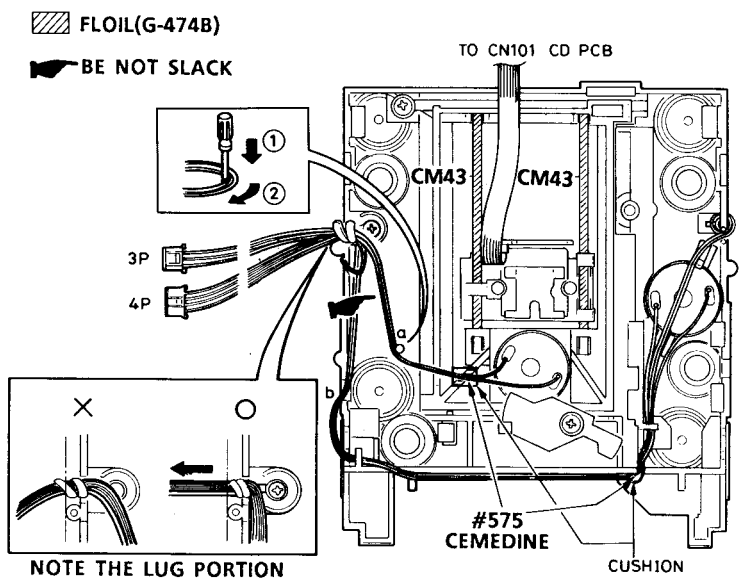

SERVICE MODE

Specifications

To enter any service mode other than timer debugging, first simultaneously press the OPEN/CLOSE and BAND keys on the CT unit. This accesses the service mode entry state. Now press one of the buttons on the CT unit to enter a service mode. As the service mode entry state is discontinued after 1 second elapses, the system will enter a service mode only if the next key is pressed within one second.

1. Confirm the clock

- When the CLOCK key is pressed during the service mode entry state, a rectangular wave with a frequency of one- fourth that of the oscillating frequency (1.048576MHz) is output from the micro processor's port CLKOUT.
- The clock output is stopped by pressing either the POWER or SET CLEAR key.

2. Timer debugging

- When the FAST key is pressed, the current time advances one minute and the seconds readout changes to 55 seconds. If the key is held down the time advances continuously.
- The FAST key, a concealed key not actually mounted to the set.

  Note : For timer debugging, the service mode entry state (entered by simultaneously pressing the OPEN/CLOSE service mode entry key and the BAND key) is not necessary.

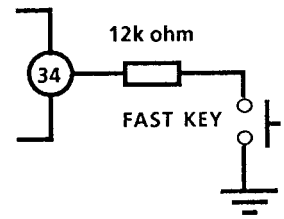

3. Checking the key input signal connections

- Enter this mode by pressing the MEMORY(TUNER) key during the service mode entry state.
- The entire LCD goes out once this mode is entered.
- In this mode, as keys on the CT unit (or remote control unit) are pressed segments on the LCD corresponding to each key on a one-to-one basis come on (i.e. the lit portions gradually increase). (Refer to Table 1.)

KEY	DISPLAY	KEY	DISPLAY	KEY	DISPLAY
TIME / FADE	TIME	CLOCK	REC	FUNCTION	DIGIT 3 : 8
REPEAT	REPEAT	SLEEP	SLEEP	BAND	DIGIT 4 : 8
STOP	ONE	TUNING UP	SIDE A	PST UP	1 OF CALENDAR
CD MEMORY	PROG.	TUNING DOWN	SIDE B	PST DOWN	2 OF CALENDAR
PLAY / PAUSE	▷	WAKE UP	WAKE UP	FM/TUNE MODE	3 OF CALENDAR
RANDOM	RANDOM	TIMER	TIMER	WIDE	4 OF CALENDAR
OPEN / CLOSE	ALL	SET / CLEAR	@	FWD	DISC
EDIT	EDIT	MEMORY	5 OF CALENDAR	BACK	TRACK
COMPUTER REC	COMP. REC	POWER	DIGIT 2 : 8		

@ : Releases the key checking mode and returns the set to the normal mode.

TABLE 1 : CORRESPONDING KEYS AND DISPLAYS IN THE KEY CHECKING MODE

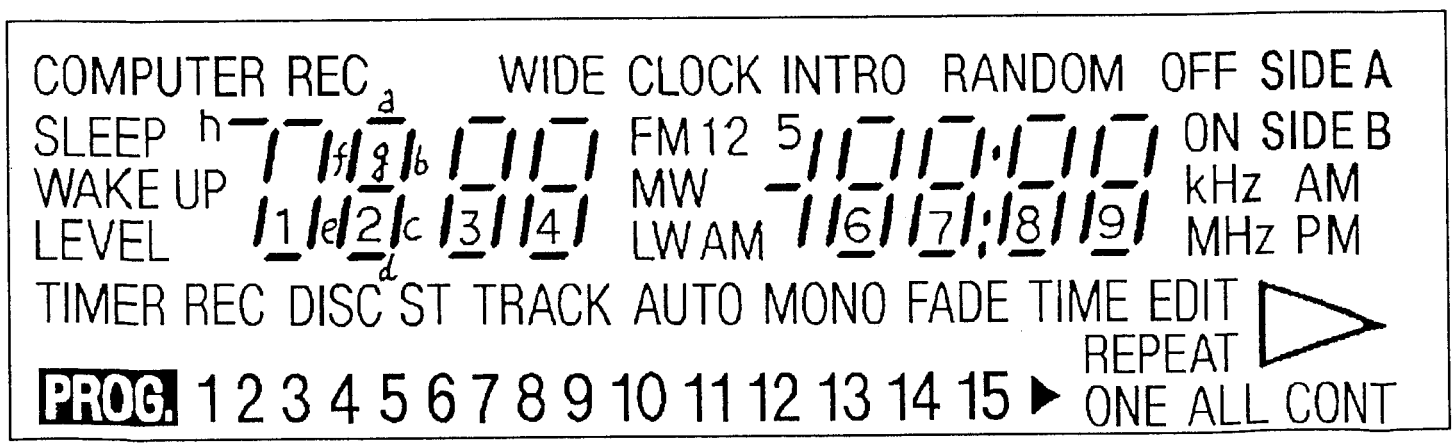

FIGURE 1 : LCD (LIQUID CRYSTAL DISPLAY)

4. Checking LCD connections

- Enter this mode by pressing the OPEN/CLOSE key during the service mode entry state. (See note.)
- The entire LCD goes out once this mode is entered.
- In this mode, one segment of the LCD lights each time the OPEN/CLOSE key is pressed.
- Press the SET/CLEAR key to exit this mode and return to the normal mode.

5. System connector checking mode

- Enter this mode by pressing the BAND key during the service mode entry state.
- Before entering this mode, connect a jig at the beginning of the system connector cord as shown in Figure 2.
- In this mode, check the signal connections shown in Table 2 for the set's CT unit and system connector cord.
- The results of the checking of connections appear on the LCD as shown in Table 2.
- Press the SET/CLEAR key to release the system connector checking mode and return to the normal mode.

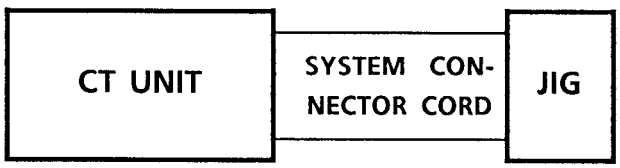

FIGURE 2 : CONNECTION DURING THE SYSTEM CONNECTOR CHECKING MODE

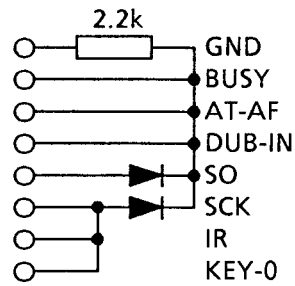

FIGURE 3 : CIRCUIT DIAGRAM OF THE CONNECTOR CHECKING JIG

STATE	DISPLAY
SO is N.G.	0
SCK is N.G.	1
DUB-IN is N.G.	2
AT-AF is N.G.	3

STATE	DISPLAY
BUSY is N.G.	4
IR is N.G.	5
KEY-0 is N.G.	6
All OK	-

Note: : With the D series, the system connector checking mode cannot be entered when the SCK(AD unit) connection is defective.

TABLE 2 : DISPLAYS DURING SYSTEM CONNECTOR CHECKING

6. CD tracking balance adjusting mode

- Enter this mode by pressing the PLAY/PAUSE key during the service mode entry state.
- If the power is off when this mode is entered, the power automatically comes on.
- In this mode, the tracking balance adjustment state (tracking is off) is automatically entered after the tray is completely closed. If the PLAY key is pressed in this state, the tracking servo is turned on and playing is begun at the present position. Therefore, the readout on the display at the time playing is begun indicates the initial position of the pickup (i.e. the position of the limit switch).
- In this mode, the tracking balance adjustment state can be entered by pressing the MEMORY key during playing. Pressing the PLAY key in this state turns on the tracking servo and causes playing to begin.
- Turning off the power releases the CD tracking balance adjusting mode.

7. CD operation display mode

- Enter this mode by pressing the STOP key during the service mode entry state.
- If the power is off when this mode is entered, the power automatically comes on.

SERVICE MODE

- In this mode, when CD function are used, displays like those shown in Table 3 (which represent CD operations different than normally displayed) appear in the LCD track number display.
- In this mode, the calendar numbers shown in Table 4 come on when an error occurs in CD operations, at which time the track number and calendar displays become fixed at their current readouts. To release these fixed displays, press the STOP key while operations are stopped.
- This mode is released when the power is turned off.

DISPLAY	OPERATION
00	Focus search has been begun
01	Focus search has been begun
02	Waiting for focusing
03	Focusing
04	Spindle kick is in progress
05	Both CLV and tracking are ON
06	Both CLV and tracking are ON
0-	Focus search has been completed (success, failure)
20	Tray closing has begun
21	Tray closing is in progress
22	Pick return (internal direction) is in progress
23	Pick return (external direction) is in progress
2-	Tray closing (pick return) has been completed
30	Spindle braking has begun
31	Spindle braking is in progress
32	Pick return is in progress
3-	Spindle braking and pick return have been completed
40	Fast forwarding is in progress
41	Rewinding is in progress
50	Playing has begun
51	Playing is in progress
52	Playing is in progress (skip return operation)
60	TOC reading has been begun
61	TOC reading is in progress

DISPLAY	OPERATION
62	TOC reading is in progress
6-	TOC reading has been completed (success/failure)
70	L-point access has been begun
71	L-point access (REV64 track jump)
72	L-point access (FWD64 track jump)
73	L-point access (REV16 track jump)
74	L-point access (FWD16 track jump)
75	L-point access (REV1 track jump)
76	L-point access has been completed
80	Pausing has begun
83	Pause (REV16 track jump)
84	Pause (FWD16 track jump)
85	Pause (REV1 track jump)
86	Pause (trace)
90	Music access has begun
91	Music access (high-speed access has begun)
92	Music access (high-speed access is in progress)
93	Music access (high-speed access has been completed)
94	Music access (high-speed access has been completed)
95	Music access (high-speed access has been completed)
96	Music access (REV64 track jump)
97	Music access (FWD64 track jump)
98	Music access (REV16 track jump)
99	Music access (FWD16 track jump)
9-	Music access (final stage)

TABLE 3 : DISPLAYS DURING THE CD OPERATION MODE

NUMBER	STATE OF CD ERROR
1	Focusing is not possible in focus search.
2	The subcode is not input during disc startup.
3	TOC cannot be read.
4	The focus was lost while the servo was on (during playing, etc.).
5	The subcode is not input while the servo is on (during playing, etc.).
6	The tray does not open completely.
7	The tray does not close completely.

TABLE 4 : DISPLAY OF CD ERRORS

CD ADJUSTMENT

Electrical Adjustment

So far we have presented explanations regarding compact disc player handling, notes prior to repair, handling the pick-up and disassembly of the unit. Be sure to carefully read these instructions before making any adjustments.

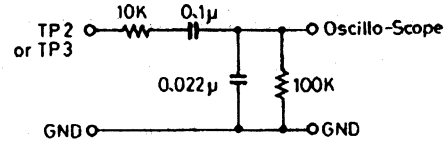

BAND PASS FILTER

Preparations for Adjustments

Measuring instruments, tools and filter

(1) Test disc. : YEDS 18 (Sony)
(2) Oscilloscope : SS5711 (10MHz or dual phenomenon)
or Memoryscope : DSS6521 (Storagescope)
(3) Digital voltmeter (Input impedance 1M ohm or more)
(4) Oscillator (400Hz, 300mV RMS)
(5) Frequency Counter (5MHz ; or more)
(6) Screw drivers (non-metalic) for adjustments
(7) Band Pass Filter
(8) AC Voltage Meter

Notes : a. The adjustments can be using the equipment produced by other manufactures provided that the performance of that equipment corresponds to that of the above listed models.
b. Use a 10 : 1 probe for observing signals on the oscilloscope and storage scope.
c. Test disc is subject change without notice.

1. Initial set

Set the SVR11 at its initial position of adjustment controls as shown in figure below.

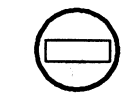
SVR11
INITIAL SET
(MECHANICAL
SENTER)

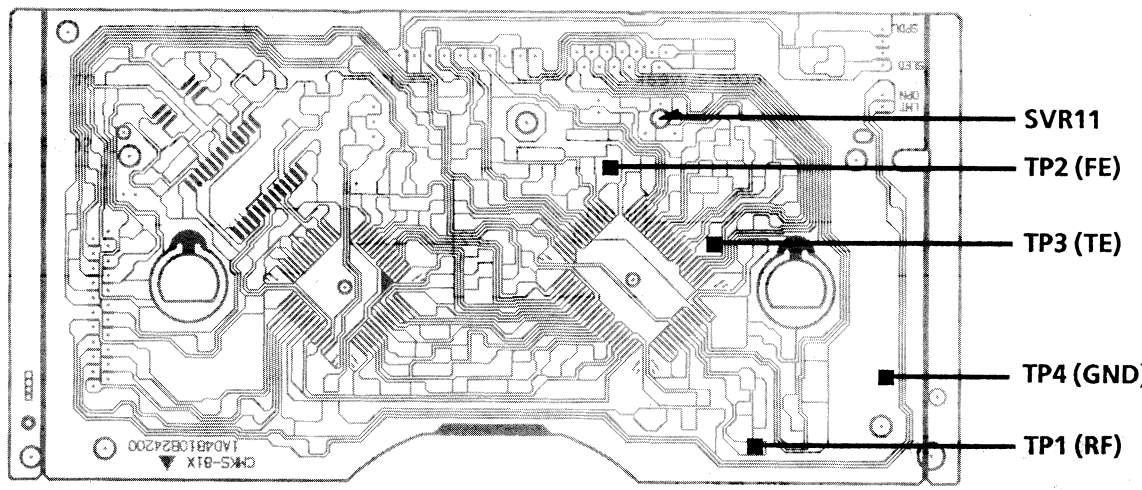

2. Tracking Balance Adjustment (SVR11)

1. Connect the oscilloscope to TP3 (TE) and TP4 (GND.).
2. Turn on the power of the unit. Insert test disc.
3. Play-back the test disc.
4. Continuously press the forward search ▸▸ or backward-search ▸▸ button to do it
5. Adjust SVR11 so that the TE (Tracking Error) signal waveform of TP3 on the oscilloscope is vertically symmetrical relative to 0V. (See figure right side)

*If the adjustment is imperfect, become run away the sled motor (pick-up sending motor), inferior playability.

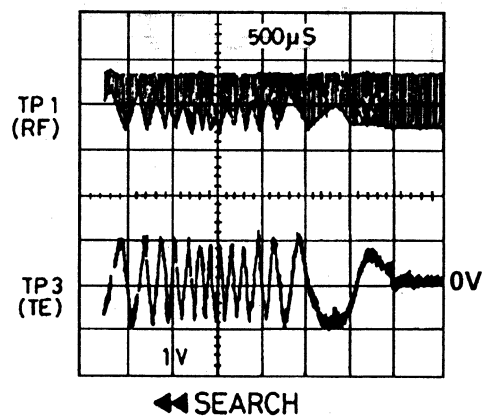

◀◀ SEARCH

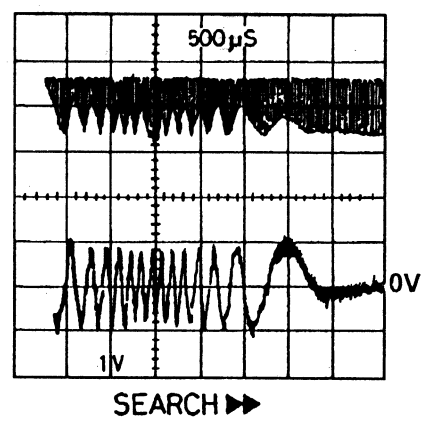

SEARCH ▶▶

CD ADJUSTMENT

2. Other Adjustment of Tracking Balance (SVR11)

1. Set the service mode(CD tracking balance adjusting mode).
   · Enter this mode by pressing the PLAY/PAUSE key during the service mode entry state. Pressing the PLAY / Pause key in this state turns on the tracking servo and causes playing to begin. (See service mode)
2. Connect the oscilloscope to TP3 (TE) and TP4 (GND).
3. Adjust SVR11 so that the TE (Traverse) signal waveform of TP3 on the oscilloscope is vertically symmetrical relative to 0V. Or may adjust SVR11 so that the DC voltage : (Peak Hold Level) - (Bottom Hold Level) of the traverse signal is 0V. (See figure right side)
4. If it were not for obtain waveform at the right figure, repeat item 2-1 ~2-3.

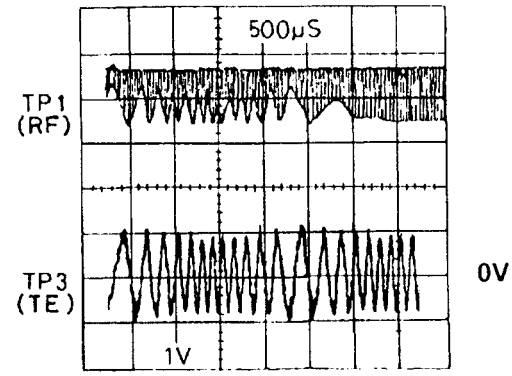

3. Focus Gain Confirmation

1. Connect the storage scope to TP2 (F.E : Focus Error) through the Band pass filter. (See BPF Figure)
2. Turn on the power of the unit.
3. Play-back the test disc.
4. Set the output of AF oscillator to 400Hz, 0.5V rms and connect to pin 24 (IC101) through the resistor : 120k ohms.
5. Confirm so that the voltage of the F.E signal waveform on the storage scope is 0.5V p-p, ±3db by through BPF.

*If this CONFIRMATION is imperfect, become weak the mechanical shock, inferior playability, and can not playback the Disc.

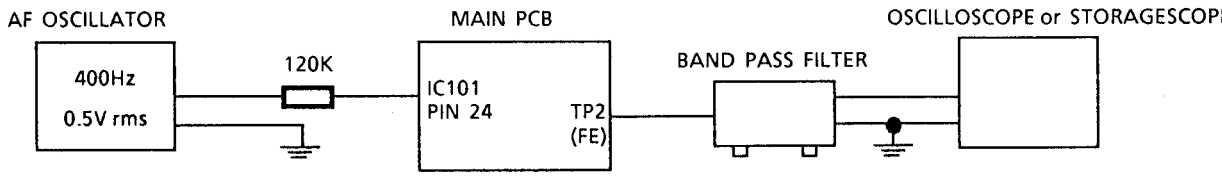

4. Tracking Gain Confirmation

1. Connect the storage scope to TP3 (T.E) through the Band pass filter. (See BPF Figure).
2. Turn on the power of the unit.
3. playback the test disc.
4. Set the output of AF oscillator to 400Hz, 0.5V rms and connect to pin 14 (IC101) through resistor 47k ohms.
5. Confirm so that the voltage of T.E signal waveform on the storage scope is 0.5V p-p, ±3db by through BPF.

*If this CONFIRMATION is imperfect, become weak the mechanical shock, inferior playability, and can not playback the Disc.

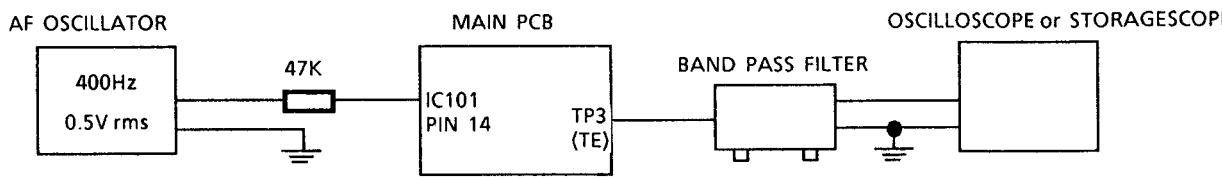

PARTS LIST

PRODUCT SAFETY NOTICE

Each precaution in this manual should be followed during servicing. Components identified with the IEC symbol ⚠ in the parts list and the schematic diagram designate components in which safety can be of special significance. When replacing a component identified ⚠, use only the replacement parts designated, or parts with the same ratings of resistance, wattage or voltage that are designated in the parts list in this manual. Leakage-current or resistance measurements must be made to determine that exposed parts are acceptably insulated from the supply circuit before returning the product to the customer.

CAUTION: Regular type resistors and capacitors are not listed. To know those values, refer to the schematic diagram.

N.S.P : Not avairable as service parts.

CABINET

Ref. No.	Part No.	Description
1	614 244 2746	ASSY,PANEL,FRONT
2	614 239 0924	ASSY,CABINET,TOP
3	614 244 3071	PANEL,REAR
4	614 239 0931	ASSY,CABINET,BOTTOM
5	614 244 2920	ESCUTCHEON,CD TRAY FRONT
6	614 244 4320	BUTTON,TIMER ETC.
7	614 244 4320	BUTTON,BAND ETC.
8	614 244 3224	BUTTON,TUN,PRESET
9	614 243 9128	BUTTON,CD ETC.
10	614 244 3200	BUTTON,CD SKIP/SEARCH
11	614 244 3194	BUTTON,CD OPEN/CLOSE
12	614 244 4030	BUTTON,CD STOP·PLAY

CHASSIS

Ref. No.	Part No.	Description
31	614 238 1694	TABLE,LOADING
32	614 239 1228	MOUNT-M,CD MECHA
33	614 239 1198	BRACKET-E,TU PCB
34	614 239 1204	BRACKET-E,CD PCB
35	614 239 1211	MOUNT-E,TU PCB
36	614 195 6978	RUBBER CUSHION,MECHA FLOAT
37	412 003 1708	SPECIAL SCREW,MECHA FIX
	614 191 3698	LABEL,LASER BEAM CAUTION
	614 232 0464	LABEL,SAFETY,LASER BEAM

FIXING PARTS

Ref. No.	Part No.	Description
Y1	411 022 8408	SCR S-TPG PAN 2X8
T2	411 021 1202	SCR S-TPG BIN 2X8
Y3	411 021 3107	SCR S-TPG BIN 2.6X8
Y4	411 021 1806	SCR S-TPG BIN 2.6X10
Y5	411 021 6405	SCR S-TPG BIN 3X8
Y6	411 021 6603	SCR S-TPG BIN 3X8
Y7	411 021 3503	SCR S-TPG BIN 3X10

ELECTRIC PARTS

Ref. No.	Part No.	Description
51	614 243 1481	CORD,CD MECHA-MICON PCB

TUNER P.C.BOARD ASSY

Ref. No.	Part No.	Description
71	614 241 9717	ASSY,PCB,TU MAIN
C2152	403 082 0201	POLYPRO 470P J 100V
C2155	403 082 2205	POLYPRO 560P J 100V
C2304	403 080 5000	POLYPRO 1000P J 100V
C2458	403 106 1603	NP-ELECT 1U Q 50V
CF201	614 240 2917	FILTER,CERAMIC,10.7MHZ,FM
CF202	614 240 2917	FILTER,CERAMIC,10.7MHZ,FM
CF204	614 211 2939	FILTER,459KHZ,AM
CF205	614 030 7443	I.F FILTER,459KHZ,AM

Ref. No.	Part No.	Description
CN201	614 210 2688	TERMINAL,(DIN)+PUSH 2P, FM ANT
CN241	614 225 3502	PLUG,14P,TO FRONT PCB
CT251	614 007 6332	TRIMMER,30PF,GR,LW
CT252	614 007 6356	TRIMMER,11PF,WH,MW
D2151	407 091 5004	VARACTOR DI SVC321SPA-C-2
D2152	407 091 5004	VARACTOR DI SVC321SPA-C-2
D2201	407 007 9904	DIODE GMA01
or	407 012 4406	DIODE 1SS133
or	407 012 5809	DIODE 1SS176
D2301	407 007 9904	DIODE GMA01
or	407 012 4406	DIODE 1SS133
or	407 012 5809	DIODE 1SS176
D2302	407 007 9904	DIODE GMA01
or	407 012 4406	DIODE 1SS133
or	407 012 5809	DIODE 1SS176
IC201	409 195 3108	IC LA1265-AUD
IC202	409 016 9500	IC LA3361
IC203	409 066 7600	IC LM7001
L2151	614 216 1029	TRANS,RF,LW
L2152	614 032 8059	ANT COIL,MW
L2153	614 239 7268	TRANS,OSC,MW
L2154	614 239 7275	TRANS,OSC,LW
L2201	614 028 4379	FILTER,CHOKE,1MH,AM
L2451	614 028 4256	FILTER,CHOKE,100UH,VDD
Q2105	405 012 5904	TR 2SC1923-Y
Q2131	405 012 2002	TR 2SC1815-GR
or	405 020 7204	TR 2SC945A-K
Q2152	405 016 2206	TR 2SC2878-A
or	405 016 2305	TR 2SC2878-B
Q2153	405 016 2206	TR 2SC2878-A
or	405 016 2305	TR 2SC2878-B
Q2154	405 016 2206	TR 2SC2878-A
or	405 016 2305	TR 2SC2878-B
Q2155	405 016 2206	TR 2SC2878-A
or	405 016 2305	TR 2SC2878-B
Q2156	405 016 2206	TR 2SC2878-A
or	405 016 2305	TR 2SC2878-B
Q2157	405 114 8407	TR 2SK193-LL
or	405 114 8506	TR 2SK193-ML
Q2158	405 012 2002	TR 2SC1815-GR
or	405 020 7204	TR 2SC945A-K
Q2201	405 018 7902	TR 2SC380TM-O
Q2202	405 012 2002	TR 2SC1815-GR
or	405 020 7204	TR 2SC945A-K
Q2203	405 001 7001	TR 2SA1015-GR
Q2301	405 012 2002	TR 2SC1815-GR
or	405 020 7204	TR 2SC945A-K
Q2302	405 067 0800	TR RN2207
or	405 078 2404	TR BN1A4P
or	405 000 0904	TR DTA114YS
Q2351	405 067 0800	TR RN2207
or	405 078 2404	TR BN1A4P
or	405 000 0904	TR DTA114YS
Q2352	405 067 0800	TR RN2207
or	405 078 2404	TR BN1A4P
or	405 000 0904	TR DTA114YS

PARTS LIST

Ref. No.	Part No.	Description
Q2354	405 067 0800	TR RN2207
or	405 078 2404	TR BN1A4P
or	405 000 0904	TR DTA114YS
Q2355	405 067 0800	TR RN2207
or	405 078 2404	TR BN1A4P
or	405 000 0904	TR DTA114YS
Q2451	405 114 1804	TR 2SC1815(L)-GR
or	405 114 1903	TR 2SC1815(L)-Y
Q2452	405 114 1804	TR 2SC1815(L)-GR
or	405 114 1903	TR 2SC1815(L)-Y
Q2461	405 012 2002	TR 2SC1815-GR
or	405 020 7204	TR 2SC945A-K
Q2701	405 012 2002	TR 2SC1815-GR
or	405 020 7204	TR 2SC945A-K
Q2702	405 016 2206	TR 2SC2878-A
or	405 016 2305	TR 2SC2878-B
Q2801	405 012 2002	TR 2SC1815-GR
or	405 020 7204	TR 2SC945A-K
Q2802	405 016 2206	TR 2SC2878-A
or	405 016 2305	TR 2SC2878-B
R2465	⚠ 401 018 1209	CARBON 33 JB 1/4W
SVR23	614 223 1906	POTENTIOMETER,10K(B),VCO
or	614 204 1901	SEMI-FIXED V.R,10K(B),VCO
TU201	614 241 7447	TUNER,RF-END,FM
T2202	614 030 4114	I.F.T,10.7MHZ,FM
T2203	614 029 3906	MX COIL,LPF
T2701	614 027 7845	COIL,CHOKE,TRAP
T2801	614 027 7845	COIL,CHOKE,TRAP
X2451	614 240 1118	RESONATOR,7.2MHZ,FOR IC203
or	614 234 0486	RESONATOR,7.2MHZ,FOR IC203

CD MICON P.C.BOARD ASSY

Ref. No.	Part No.	Description
72	614 239 2065	ASSY,PCB, CD MICON
C1301	403 196 9602	DL-ELECT 0.047F Z 5.5V,FOR MICON BACKUP
C1302	403 135 3302	ELECT 1000U M 6.3V
C1522	403 056 7908	POLYESTER 1000P K 50V
C1523	403 056 7908	POLYESTER 1000P K 50V
C1608	403 043 3104	ELECT 2200U M 16V, FOR +9V
C1609	403 042 6205	ELECT 1000U M 16V, FOR -9V
CN131	614 225 6459	PLUG,13P,CD-FRONT
CN132	614 225 6381	PLUG,6P,CD-FRONT
CN141	614 241 6143	SOCKET,22P,CD-MECHA
or	614 243 3218	SOCKET,22P,CD-MECHA
CN161	614 239 5455	SOCKET,19P,CT-DA UNIT
D1301	407 005 4505	DIODE DS442X
or	407 013 7109	DIODE 1S2473
D1302	407 050 1801	ZENER DIODE GZA3.9Z
or	407 053 5202	ZENER DIODE MTZ3.9B
D1303	407 005 4505	DIODE DS442X
or	407 013 7109	DIODE 1S2473
D1304	407 005 4505	DIODE DS442X, FOR IR
or	407 013 7109	DIODE 1S2473, FOR IR
D1601	⚠ 407 004 9105	DIODE DSF10C
or	⚠ 407 012 3300	DIODE 1SR35-200A
D1602	⚠ 407 004 9105	DIODE DSF10C
or	⚠ 407 012 3300	DIODE 1SR35-200A
D1603	⚠ 407 004 9105	DIODE DSF10C
or	⚠ 407 012 3300	DIODE 1SR35-200A
D1604	⚠ 407 004 9105	DIODE DSF10C
or	⚠ 407 012 3300	DIODE 1SR35-200A
D1605	407 013 7109	DIODE 1S2473
or	407 005 4505	DIODE DS442X
IC103	410 146 1104	IC UPD75116GF-F56-3BE

Ref. No.	Part No.	Description
IC107	⚠ 409 189 4203	IC M5278D05
IC108	409 040 1105	IC NJM79L05A
IC109	409 039 9204	IC NJM78L05A
L1301	614 028 4133	FILTER,CHOKE,10UH
L1501	614 212 3171	INDUCTOR,FERITE,CD OUT L-CH
L1502	614 212 3171	INDUCTOR,FERITE,CD OUT R-CH
Q1301	405 006 1806	TR 2SA933S-R
or	405 006 1905	TR 2SA933S-S
or	405 002 1305	TR 2SA1048-Y
Q1302	405 011 8500	TR 2SC1740S-R
or	405 011 8609	TR 2SC1740S-S
or	405 014 5209	TR 2SC2458-GR
Q1303	405 006 1806	TR 2SA933S-R
or	405 006 1905	TR 2SA933S-S
or	405 002 1305	TR 2SA1048-Y
Q1304	405 011 8500	TR 2SC1740S-R
or	405 011 8609	TR 2SC1740S-S
or	405 014 5209	TR 2SC2458-GR
Q1305	405 006 1806	TR 2SA933S-R
or	405 006 1905	TR 2SA933S-S
or	405 002 1305	TR 2SA1048-Y
Q1500	405 011 8500	TR 2SC1740S-R
or	405 011 8609	TR 2SC1740S-S
or	405 014 5209	TR 2SC2458-GR
Q1501	405 011 8500	TR 2SC1740S-R
or	405 011 8609	TR 2SC1740S-S
or	405 014 5209	TR 2SC2458-GR
S1301	614 221 8327	SWITCH,TACT,RESET
X1301	614 229 3300	RESONATOR,XTAL,4.19MHZ

CD MAIN P.C.BOARD ASSY

Ref. No.	Part No.	Description
73	614 239 2072	ASSY,PCB,CD MECHA
CN101	614 227 7935	SOCKET,13P,FOR PICKUP(FFC)
CN102	614 017 3833	PLUG,4P,FOR MOTOR
CN103	614 017 3826	PLUG,3P,FOR SWITCH
CN104	614 035 2061	SOCKET,22P,TO CD MICON(FFC)
or	614 243 3225	SOCKET,22P,TO CD MICON(FFC)
IC101	409 245 4802	IC LA9210M
IC102	⚠ 409 247 0000	IC LA6524
IC104	409 248 8708	IC LC7866E
IC105	409 278 0109	IC SM5870DS
IC106	409 241 5506	IC XRA15218F
or	409 192 7109	IC BA15218F
Q101	405 002 0308	TR 2SA1037K-R
Q102	405 014 4509	TR 2SC2412K-R
Q103	405 014 4509	TR 2SC2412K-R
SVR11	614 223 1906	POTENTIOMETER,10K(B),T.BAL
TP101	614 227 6839	TERMINAL,TEST POINT,RF
TP102	614 227 6839	TERMINAL,TEST POINT,FE
TP103	614 227 6839	TERMINAL,TEST POINT,TE
TP104	614 227 6839	TERMINAL,TEST POINT,GND
TP105	614 227 6839	TERMINAL,TEST POINT,PLL
X101	614 236 1818	RESONATOR,16.93MHZ

FRONT P.C.BOARD ASSY

Ref. No.	Part No.	Description
74	614 239 2058	ASSY,PCB,FRONT
	614 241 9151	REFLECTOR,LCD
	614 238 8037	SHEET,LCD
	411 021 3107	SCR S-TPG BIN 2.6X8
CN251	614 221 9133	SOCKET,13P,CD MICON PCB
CN252	614 221 9065	SOCKET,6P,CD MICON PCB

PARTS LIST

Ref. No.	Part No.	Description
CN253	614 226 2481	SOCKET,14P,TUNER PCB
D2501	407 013 1701	DIODE 1S1588
or	407 013 7109	DIODE 1S2473
or	407 005 4505	DIODE DS442X
D2502	407 013 1701	DIODE 1S1588
or	407 013 7109	DIODE 1S2473
or	407 005 4505	DIODE DS442X
IC251	410 146 1203	IC UPD75306GF-225-3B9
L2501	614 028 4256	FILTER,CHOKE,100UH
LCD21	614 238 0284	LCD(LIQUID CRYSTAL DISPLAY)
S2511	614 220 5563	SWITCH,TACT,OPEN/CLOSE
S2512	614 220 5563	SWITCH,TACT,PLAY/PAUSE
S2513	614 220 5563	SWITCH,TACT,STOP
S2514	614 220 5563	SWITCH,TACT,REPEAT
S2515	614 220 5563	SWITCH,TACT,CD MEMORY
S2516	614 220 5563	SWITCH,TACT,C.REC
S2517	614 220 5563	SWITCH,TACT,EDIT
S2518	614 220 5563	SWITCH,TACT,TIME/FADE
S2521	614 220 5563	SWITCH,TACT,CLOCK
S2522	614 220 5563	SWITCH,TACT,SLEEP
S2523	614 220 5563	SWITCH,TACT,WAKE UP
S2524	614 220 5563	SWITCH,TACT,TIMER
S2525	614 220 5563	SWITCH,TACT,PSP DOWN
S2526	614 220 5563	SWITCH,TACT,FWD
S2527	614 220 5563	SWITCH,TACT,BACK
S2528	614 220 5563	SWITCH,TACT,RANDOM
S2531	614 220 5563	SWITCH,TACT,BAND
S2532	614 220 5563	SWITCH,TACT,CLEAR
S2533	614 220 5563	SWITCH,TACT,TUN MEMORY
S2534	614 220 5563	SWITCH,TACT,MODE
S2535	614 220 5563	SWITCH,TACT,PST UP
S2536	614 220 5563	SWITCH,TACT,TUN UP
S2537	614 220 5563	SWITCH,TACT,TUN DOWN
S2540	407 152 1303	PHOTO DI SPS-422-1,IR
or	614 237 8724	OPTO CONNECTOR,IR RESEIVER
X2501	614 215 5561	RESONATOR,CERAMIC,4.19MHZ,F

Ref. No.	Part No.	Description
D5559	407 153 9803	LED CL-170G-CD-AH
or	407 153 9902	LED CL-170G-CD-BH
or	407 154 0007	LED CL-170G-CD-CH
D5560	407 153 9506	LED CL-170G-CD-AL
or	407 153 9605	LED CL-170G-CD-BL
or	407 153 9704	LED CL-170G-CD-CL
D5561	407 153 9803	LED CL-170G-CD-AH
or	407 153 9902	LED CL-170G-CD-BH
or	407 154 0007	LED CL-170G-CD-CH
D5562	407 153 9506	LED CL-170G-CD-AL
or	407 153 9605	LED CL-170G-CD-BL
or	407 153 9704	LED CL-170G-CD-CL
D5563	407 153 9803	LED CL-170G-CD-AH
or	407 153 9902	LED CL-170G-CD-BH
or	407 154 0007	LED CL-170G-CD-CH
D5564	407 153 9803	LED CL-170G-CD-AH
or	407 153 9902	LED CL-170G-CD-BH
or	407 154 0007	LED CL-170G-CD-CH
D5565	407 153 9506	LED CL-170G-CD-AL
or	407 153 9605	LED CL-170G-CD-BL
or	407 153 9704	LED CL-170G-CD-CL
D5566	407 153 9803	LED CL-170G-CD-AH
or	407 153 9902	LED CL-170G-CD-BH
or	407 154 0007	LED CL-170G-CD-CH
D5567	407 153 9803	LED CL-170G-CD-AH
or	407 153 9902	LED CL-170G-CD-BH
or	407 154 0007	LED CL-170G-CD-CH
D5568	407 153 9506	LED CL-170G-CD-AL
or	407 153 9605	LED CL-170G-CD-BL
or	407 153 9704	LED CL-170G-CD-CL
D5569	407 153 9803	LED CL-170G-CD-AH
or	407 153 9902	LED CL-170G-CD-BH
or	407 154 0007	LED CL-170G-CD-CH
D5570	407 153 9506	LED CL-170G-CD-AL
or	407 153 9605	LED CL-170G-CD-BL
or	407 153 9704	LED CL-170G-CD-CL

LED (LCD BACK LIGHT) P.C.BOARD ASSY

Ref. No.	Part No.	Description
74	614 239 9095	ASSY,PCB,LED
CN562	614 242 9488	ASSY,CONNECTOR-S,2P, FROM FRONT
D5551	407 153 9506	LED CL-170G-CD-AL
or	407 153 9605	LED CL-170G-CD-BL
or	407 153 9704	LED CL-170G-CD-CL
D5552	407 153 9506	LED CL-170G-CD-AL
or	407 153 9605	LED CL-170G-CD-BL
or	407 153 9704	LED CL-170G-CD-CL
D5553	407 153 9803	LED CL-170G-CD-AH
or	407 153 9902	LED CL-170G-CD-BH
or	407 154 0007	LED CL-170G-CD-CH
D5554	407 153 9803	LED CL-170G-CD-AH
or	407 153 9902	LED CL-170G-CD-BH
or	407 154 0007	LED CL-170G-CD-CH
D5555	407 153 9803	LED CL-170G-CD-AH
or	407 153 9902	LED CL-170G-CD-BH
or	407 154 0007	LED CL-170G-CD-CH
D5556	407 153 9506	LED CL-170G-CD-AL
or	407 153 9605	LED CL-170G-CD-BL
or	407 153 9704	LED CL-170G-CD-CL
D5557	407 153 9506	LED CL-170G-CD-AL
or	407 153 9605	LED CL-170G-CD-BL
or	407 153 9704	LED CL-170G-CD-CL
D5558	407 153 9506	LED CL-170G-CD-AL
or	407 153 9605	LED CL-170G-CD-BL
or	407 153 9704	LED CL-170G-CD-CL

EXPLODED VIEW (TUNER & CD UNIT)

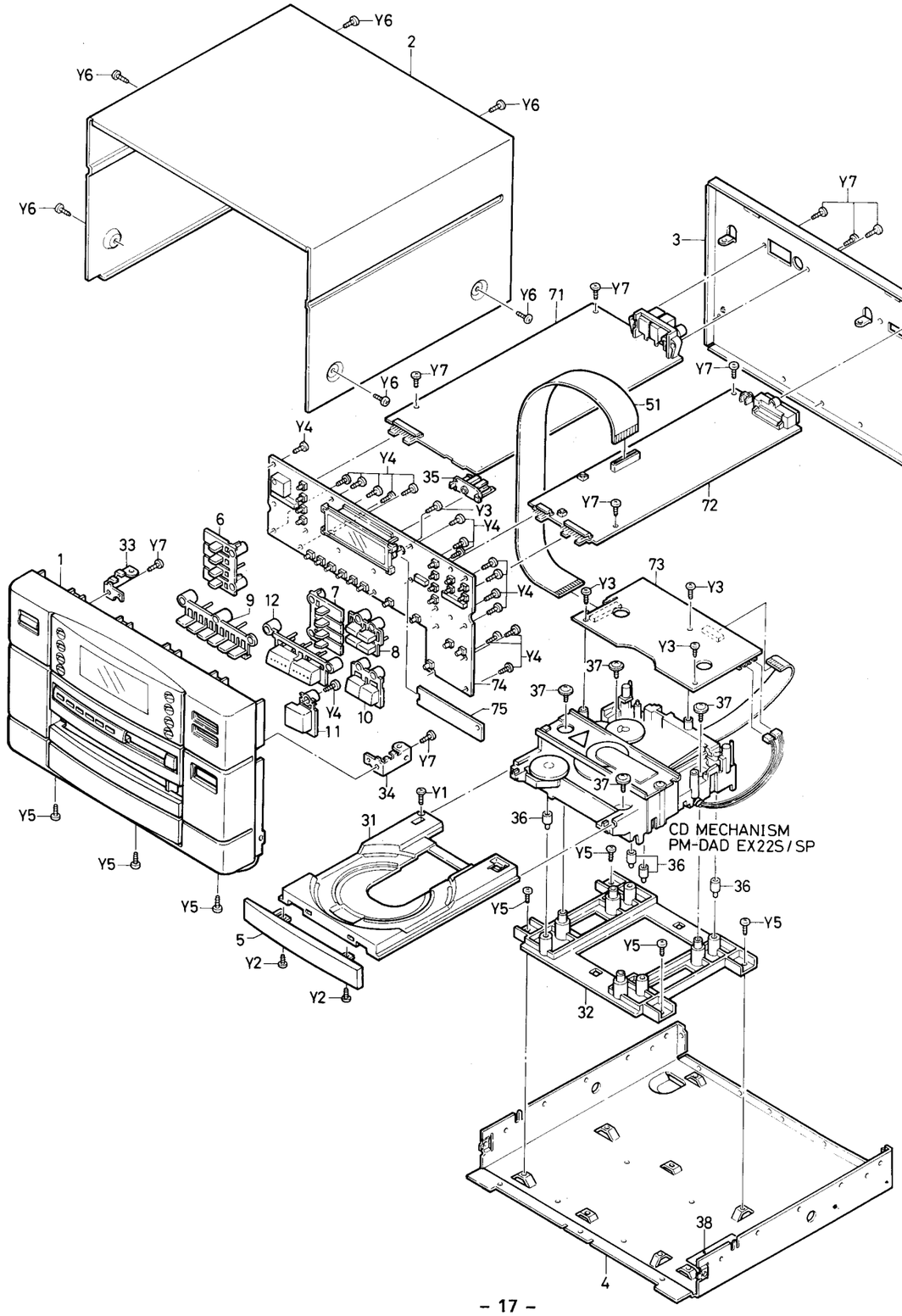

EXPLODED VIEW (CD MECHANISM)

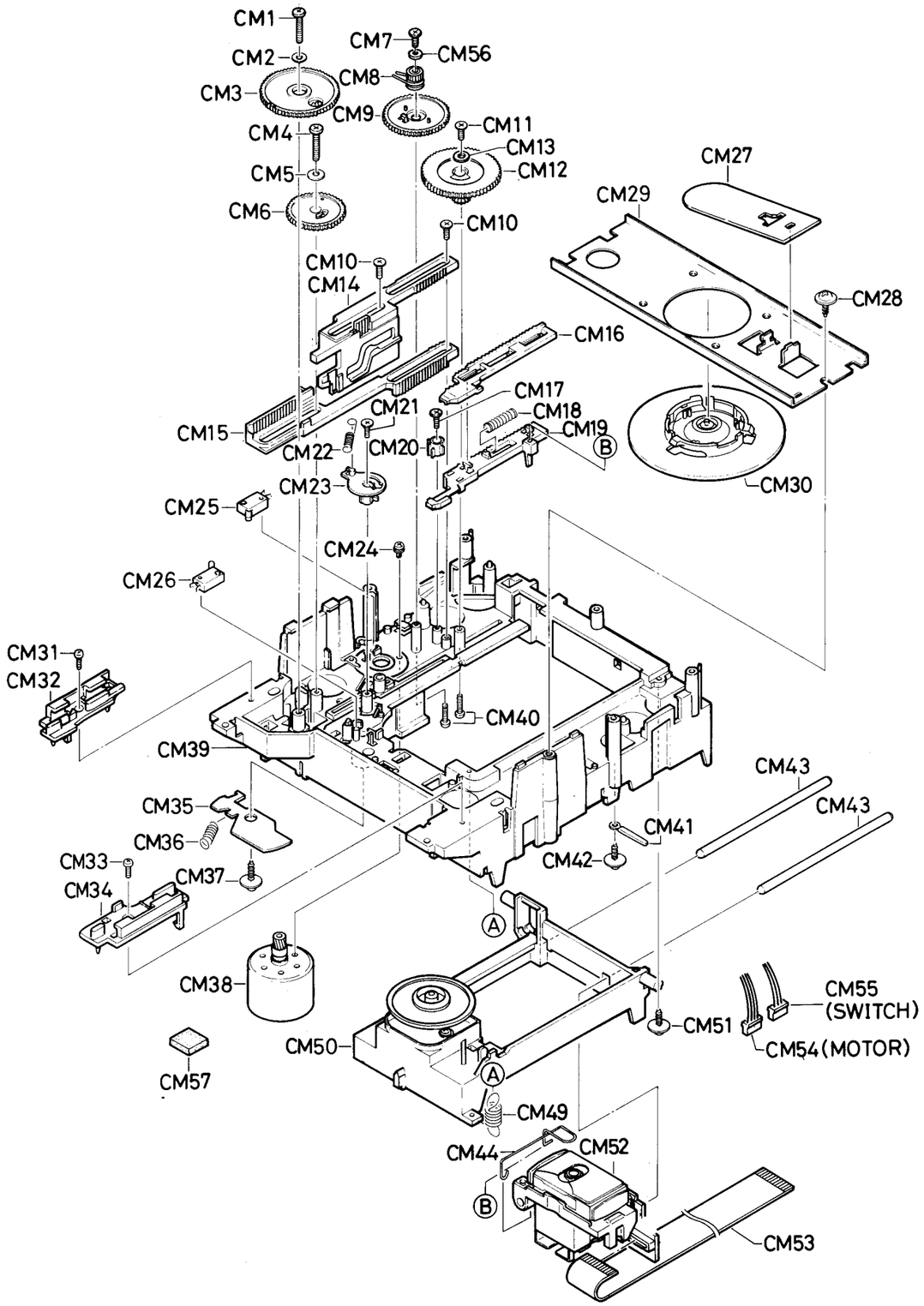

PARTS LIST (CD MECHANISM)

CD MECHANISM (PM-DAD EX22S / SP)

Ref. No.	Part No.	Description
CM01	411 119 8908	SCR S-TPG PAN 2X14,GEAR FIX
CM02	411 087 4704	WASHER V 2X6X0.4,GEAR FIX
CM03	614 224 2056	GEAR TRAY MOVE
CM04	411 119 8908	SCR S-TPG PAN 2X14,GEAR FIX
CM05	411 087 4704	WASHER V 2X6X0.4,GEAR FIX
CM06	614 224 2049	GEAR,TRAY
CM07	411 152 4301	SCR S-TPG PAN PCS 1.7X6
CM08	614 237 9172	ASSY,GEAR,CLUTCH INNER
CM09	614 238 4794	GEAR,CLUTCH OUTER
or	614 243 6455	GEAR,CLUTCH OUTER
CM10	412 031 2104	SPECIAL SCREW,SLIDE FIX
CM11	411 152 4301	SCR S-TPG PAN PCS 1.7X6
CM12	614 224 1998	GEAR,PICK SLED
CM13	412 045 4101	SPECIAL WASHER,PICK GEAR
CM14	614 233 6311	SLIDE,BASE UP/DOWN
CM15	614 224 2094	SLIDE,TRAY
CM16	614 224 2018	GEAR,PICK RACK UPPER
CM17	412 031 2104	SPECIAL SCREW,GEAR FIX
CM18	614 225 0884	SPRING,COMP,RACK BACK
CM19	614 224 2001	GEAR,PICK RACK LOWER
CM20	614 224 2032	GEAR,BASE/TRAY TIMING
CM21	412 031 2104	SPECIAL SCREW,GEAR FIX
CM22	614 242 8665	SPRING,TENS,GEAR TENSION
CM23	614 237 8304	GEAR,TIMING
CM24	411 044 7205	SCR PAN+SW 2X4,SLED MOTOR
CM25	614 018 9223	SWITCH,LIMIT
CM26	614 018 9223	SWITCH,TRAY OPEN
CM27	614 202 5277	SPRING PLATE,CHUCKING
CM28	411 020 9803	SCR S-TPG BRZ+FLG 3X6
CM29	614 224 1967	BRACKET-M,CHUCKING
CM30	614 243 2594	ASSY,PULLEY

Ref. No.	Part No.	Description
CM31	411 022 7807	SCR S-TPG PAN 2X6,BRACKET
CM32	614 224 3176	BRACKET-M,TRAY GUIDE(L)
CM33	411 022 7807	SCR S-TPG PAN 2X6,BRACKET
CM34	614 224 3183	BRACKET-M,TRAY GUIDE(R)
CM35	614 233 6304	LEVER,BASE
CM36	614 226 5536	SPRING,COMP,BASE LEVER MOVE
CM37	411 020 9902	SCR S-TPG BRZ+FLG 3X8,LEVER
CM38	614 225 4820	ASSY,MOTOR,LOADING/SLED
CM39	614 241 5764	CHASSIS,LOADING CHASSIS
or	614 242 8641	CHASSIS,LOADING CHASSIS
CM40	412 031 2104	SPECIAL SCREW,REINFORCEMENT
CM41	614 129 9136	LUG,WIRE DRESS
CM42	411 021 5705	SCR S-TPG BIN 3X6,LUG FIX
CM43	614 230 0411	SHAFT,PICK RAIL
CM44	614 229 4529	SPRING,WIRE,PICK BACK
CM49	614 228 5084	SPRING,TENS,BASE PULL UP
CM50	614 247 1950	ASSY,CHASSIS,BASE CHASSIS, WITH SPINDOLE MOTOR + TURN-TABLE,SERVICE ONLY
CM51	411 020 9803	SCR S-TPG BRZ+FLG 3X6
CM52	614 239 1303	PICKUP,LASER,PLASTIC (SF-P1PS)
or	614 231 6047	PICKUP,LASER,ALMINUM (SF-90PS)
CM53	614 232 2062	CORD,13P,PICK UP
CM54	614 246 2959	ASSY,CONNECTOR-S,4P,
or	614 246 2966	SPINDLE/SLED MOTOR
CM55	614 246 2973	ASSY,CONNECTOR-S,3P,
or	614 246 2980	LIMIT/TRAY OPEN SWITCH
CM56	412 014 2800	SPECIAL WASHER,GEAR FIX
CM57	614 125 6528	CUSHION,MOTOR LEAD FIX

IC BLOCK DIAGRAM (CD)

IC101 LA9210M (Servo Signal Processor)

No.	PIN NAME	I/O	FUNCTION
1	NC		Non Connection
2	VEE		-5V
3	E	I	IV Convert Input (from Photo Diode E)
4	F	I	IV Convert Input (from Photo diode F)
5	FN	I	IV Converter Input
6	FO	O	IV Converter Output
7	TEAO	O	Tracking Error Amplifier Output
8	VREF2	I	Reference Voltage 2
9	VREF3	I	Reference Voltage 3
10	TES1	I	Test Input
11	ATSC	I	+ Input of Anti Shock Detect Amplifier
12	ATSC-	I	- Input of Anti Shock Detect Amplifier
13	TPA+	I	- Input of Tracking Pulse Amplifier
14	TPA-	I	+ Input of Tracking Pulse Amplifier
15	TPAO	O	Tracking Pulse Amplifier Output
16	TOFS	I	Input for Tracking Offset
17	THDS	I	Tracking Servo Hold Switch
18	TD+	I	Add the Track Jump Pulse
19	JPO	O	Track Jump Pulse Amplifier Output
20	SLEQ	I	Input for Sled Servo Equalizer
21	TDO	O	Tracking Actuator Coil Driver Output
22	FDO	O	Focus Actuator Coil Driver Output
23	FD-	I	Input for Focus Actuator Coil Driver
24	FSW	I	Focus Servo Switch
25	NC		Non Connection
26	FEAO	O	Focus Error Amplifier Output
27	FE+	I	+ Input of Focus Error Amplifier
28	FD+	I	+ Input of Focus Actuator Coil Driver
29	SPO	O	CLV Error Amplifier Output
30	SPO-	I	Input for Spindle Motor Driver
31	SPDO	O	Spindle Motor Driver Output
32	VEE		-5V
33	SLDO	O	Sled Motor Driver Output
34	SL-	I	- Input of Sled Motor Driver
35	SL+	I	+ Input of Sled Motor Driver
36	VCC		+5V
37	SLSW	I	Sled Servo Switch
38	DEFO	O	Defect Signal Output
39	2FREQ	I	Input for VCO
40	DRF	O	Focusing Servo ON : High Level

No.	PIN NAME	I/O	FUNCTION
41	NC		Non Connection
42	JP-	I	- Input of Track Jump Pulse Amplifier
43	JP+	I	+ Input of Track Jump Pulse Amplifier
44	THLD	I	Hold of Output Voltage of Tracking Servo
45	TGL	I	Tracking Gain Low
46	TOFF	I	Input For Off the Tracking Servo
47	TES	O	Tracking Error Signal
48	HFL	O	Detect Track Signal
49	FZD	O	Detect S Carve of Focus Error Signal
50	FOCS	I	Input For Off the Focus Servo
51	CLV-	I	- Input of CLV Error Amplifier
52	CLV+	I	+ Input of CLV Error Amplifier
53	SLCO	O	Slice Level Control Amplifier Output
54	$\overline{\text{EFMO}}$	I	$\overline{\text{EFMO}}$ (RF) Signal
55	AI	I	EFMO (RF) Signal
56	VDD		+5V
57	PDO	I	+ Input of VCO Control Amplifier
58	PDO-	I	- Input of VCO Control Amplifier
59	VCOC	I	VCO Control Amplifier Output
60	VCOO	O	VCO Output
61	LF1	I	Input of Low Pass Filter
62	CLK	I	Clock
63	LASER	I	Laser Control Signal
64	66/60	I	Select of DSP LC7866/LC7860
65	NC		Non Connection
66	DF2	I	Input for Defect Pulse width Control
67	DF1	I	Input for Defect Pulse width Control
68	PH3	O	Defect Detect Timing
69	BH	I	Track Detect Timing
70	PH	I	Focus Detect Timing
71	GND		Ground
72	RF SUM	O	RF SUM Amplifier Output
73	RFS-	O	IV Converter Output
74	LDO	O	Laser Diode ON
75	LDS	I	Input of Auto Laser Power Control
76	LDC	I	Input of Auto Laser Power Control
77	VDD		+5V
78	FIN1	I	IV Convert Input (From Photo Diode A+C)
79	FIN2	I	IV Convert Input (From Photo Diode B+D)
80	VREF1	I	Reference Voltage 1

IC102 LA6524 (Dual Motor & Actuator Coil Driver)

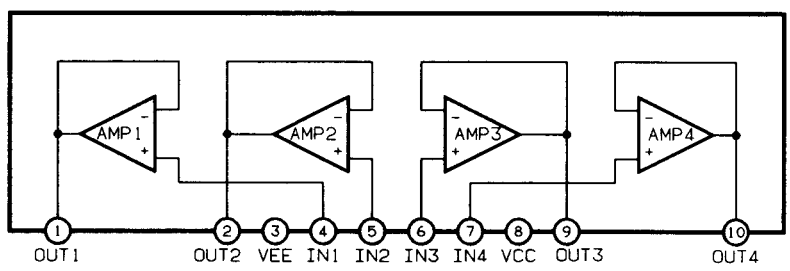

IC BLOCK DIAGRAM (CD)

IC103 μPD75116-F56 (CD Micro Processor)

PIN No.	SIGNAL NAME	PORT NAME	DESCRIPTION	I/O
1	CD MUTE	P41	Control Signal of Analogue Muting	O
2	P CONT	P40	Control Signal of Power Supply for CD Circuit	O
3	NC	P53	Not Used (Open)	O
4	FC	P52	Function Control C Signal	O
5	FB	P51	Function Control B Signal	O
6	FA	P50	Function Control A Signal	O
7	RESET	RESET	System Reset	I
8	X2	XO	X'tal Out (4.19 MHz)	O
9	X1	XI	X'tal In (4.19 MHz)	I
10	V CHK	P63	Detection Signal of the Stoppage Failure of Electricity	I
11	V DEC O	P62	Detection Signal Out of Voltage Drop	O
12	V DEC I	P61	Detection Signal In of Voltage Drop	I
13	TU MUTE	P60	Control Signal of Tuner Muting	O
14	NC	P73	Not Used (Ground)	I
15	NC	P72	Not Used (Ground)	I
16	DUB IN	P71	Dubbing Signal	I
17	TA AF	P70	Function Signal for Tape Deck	I
18	NC	P83	Not Used (Open)	O
19	NC	P82	Not Used (Open)	O
20	CLV GAIN	P81	Select Signal for CLV (Constant Linear Velocity) Gain	O
21	AMP SO	P80	Data Out to AD Micro Processor (μPD75512)	O
22	AMP SCK	P93	Clock Out to AD Micro Processor (μPD75512)	O
23	TRAY LED	P92	CD Tray Indicator LED	O
24	SUB SO	P91	Data Out to Sub Micro Processor (μPD73508)	O
25	SUB SCK	P90	Clock Out to Sub Micro Processor (μPD73508)	O
26	VSS	VSS	Ground	
27	SUB BUSY	P13/INT3	Busy Signal In from Sub Micro Processor (μPD73508)	I
28	AMP BUSY	P12/INT2	Busy Signal In from AD Micro Processor (μPD75512)	I
29	WRQ	P11/INT1	DSP (Digital Signal Processor) Interface [Sub Q Request]	I
30	IR	P10/INT0	Infrared Ray Receiving (Remocon) Signal	I
31	KEY3	PTH03	Key Input Signal	I
32	KEY2	PTH02	Key Input Signal	I
33	KEY1	PTH01	Key Input Signal	I
34	KEY0	PTH00	Key Input Signal	I
35	NC	TI0	Not Used (Open)	
36	NC	TI1	Not Used (Open)	
37	CLOSE	P23	Control Signal of Tray Close	O
38	CLK OUT	P22/PCL	Clock Signal for Adjustment	O
39	OPEN	P21/PT01	Control Signal of Tray Open	O
40	RWC	P20/PT00	DSP (Digital Signal Processor) Interface [Command Latch]	O
41	SQOUT	P03/SI	DSP (Digital Signal Processor) Interface [Sub Q Data]	I
42	COIN	P02/SO	DSP (Digital Signal Processor) Interface [Command Data]	O
43	CQCK	P01/SCK	DSP (Digital Signal Processor) Interface [Clock]	O
44	DRF	P00/INT4	DRF Signal	I
45	OPN SW	P123	Switch Detection Signal for Open End of CD Tray	I
46	LIM SW	P122	Switch Detection Signal for Limit of Pickup	I
47	NC	P121	Not Used (Ground)	I
48	NC	P120	Not Used (Ground)	I
49	NC	P133	Not Used (Ground)	I
50	NC	P132	Not Used (Ground)	I
51	SW PRE	P131	Select Signal from ON/OFF Switch for Pre Muting	I
52	SW HI AC	P130	Select Signal from ON/OFF Switch for High Speed Access	I
53	SW DAC	P143	Select Signal from ON/OFF Switch for DAC (Digital to Analogue Converter)	I
54	SW BAND	P142	Select Signal from TU/BAND or FM Switch for Remocon Function	I
55	SW PST	P141	Select Signal from PST UP or SCAN Switch for Remocon Function	I
56	SW S D	P140	Select Signal from S/D Series Switch	I
57	NC	NC	Not Connection	
58	VDD	VDD	Power Supply +5V	
59	PULL UP	P33	Power supply to Pull Up Resistors	O
60	NC	P32	Not Used (Open)	O
61	DSP RES	P31	Reset Control Signal for DSP (Digital Signal Processor)	O
62	ATT	P30	DAC (Digital to Analogue Converter) Interface [Data]	O
63	SHIFT	P43	DAC (Digital to Analogue Converter) Interface [Clock]	O
64	LATCH	P42	DAC (Digital to Analogue Converter) Interface [Latch]	O

IC BLOCK DIAGRAM (CD)

IC104 LC7866E (Digital Signal Processor)

No	PIN NAME	I/O	DESCRIPTION
1	TEST1	I	For TEST. Normal time is non connection.
2	AO	O	Input from VCO output in LA9210 .(8.6436MHz) Phase comparison output of VCO and EFM signal.
3	AI	I	
4	PDO	O	
5	VSS		GND
6	$\overline{EFMO}$	O	Negative output through amplitude limiter. Antiphase of $\overline{EFMO}$. This signal use SLICE LEVEL CONTROL.
7	EFMO	O	Positive output through amplitude limiter. Antiphase of EFMO. This signal use SLICE LEVEL CONTROL.
8	EFMIN	I	Inputting HF signal of 1~2V_{p-p}. This signal use SLICE LEVEL CONTROL.
9	TEST2	I	For TEST. Normal time is non connection.
10	CLV+	O	Output for DISC MOTOR CONTROL.
11	CLV-	O	Output for DISC MOTOR CONTROL.
12	V/P	O	CLV rough Servo time : Output "H" Phase control time : Output"L"
13	FOCS	O	Output "H" : Lens pull up with slowly than stop the Focus
14	$\overline{FST}$	O	Servo. If $\overline{FZD}$ generate, it reset output of FOCS. For lead-in of
15	$\overline{FZD}$	I	Focus
16	HFL	I	Comply with command of track jump, it oscillate kick Pulse, JP+ & JP-. It jump the prescribed number of track (1,4,16,64).
17	TES	I	Comply with command of track jump, it oscillate kick Pulse, JP+ & JP-. It jump the prescribed number of track (1,4,16,64).
18	PCK	O	PCK Monitor (4.3218MHz)
19	FSEQ	O	SYNC (FS of truth) detected from EFM signal = SYNC of counter : "H" (Latch Output during in 1 frame)
20	TOFF	O	Comply with command of track jump, it oscillate kick Pulse, JP+ & JP-. It jump the prescribed number of track (1,4,16,64).
21	TGL	O	
22	THLD	O	
23	TEST3	I	For TEST. Normal time is non connection.
24	VDD		+5V
25	JP+	O	Comply with command of track jump, it oscillate kick Pulse, JP+ & JP-. It jump the prescribed number of track (1,4,16,64).
26	JP-	O	
27	DEMO	I	For adjustment of production process. Sound on function.
28	TEST4	I	For TEST. Normal time is non connection.
29	EMPH	O	Output is "H" time, it need de-emphasis
30	TESTA	I	For TEST. Normal time is "H".

No	PIN NAME	I/O	DESCRIPTION
31	SMP2	O	Output of signal to DAC, Signal of Latch & L/R select, Signal for Sampling Hold
32	SMP1	O	
33	LRCLK	O	Output of signal to DAC, Signal of Latch & L/R select, Signal for Sampling Hold
34	SMP	O	
35	DFOUT	O	Output of signal to DAC, Signal of Latch & L/R select, Signal for Sampling Hold
36	DACLK	O	Output of signal to DAC, Signal of Latch & L/R select, Signal for Sampling Hold
37	TESTB	O	For TEST. Normal time is non connection.
38	TESTC	O	For TEST. Normal time is non connection.
39	CK2	O	For output of signal that Comply with CD-ROM
40	ROMOUT	O	For output of signal that Comply with CD-ROM
41	C2FLCK	O	For output of signal that Comply with CD-ROM
42	C2F	O	For output of signal that Comply with CD-ROM
43	DOUT	O	Output of DIGITAL OUT
44	SBSY	O	Synchronizing signal of sub-code block.
45	EFLG	O	For correction monitor of C1, C2, single, double.
46	PW	O	SFSY is Synchronizing signal of sub-code & frame. Clock of eighth send to SBCK then read out the sub-code of P, Q, R, S, T, U, V, & W.
47	SFSY	O	
48	SBCK	I	
49	FSX	O	Output of Synchronizing signal (7.35KHz)
50	WRQ	O	Data sub-code Q pass the CRC check then WRQ do "H". It detect at external, Data read out from SQOUT by send the CQCK. RWC set the "H" by Micro Processor then it let command by send with Synchronizing CQCK command data.
51	RWC	I	
52	SQOUT	O	
53	COIN	I	
54	CQCK	I	
55	RES	I	Turn on the Power Supply time : Once "L"
56	M/L	I	Data of SQOUT want at the LBS first time : M/L set the "L".
57	$\overline{LASER}$	O	This output can control at Serial Control from Micro Processor
58	16M	O	16M Output (16.9344MHz)
59	4M	O	4M Output (4.2336MHz)
60	CONT	O	This output can control at Serial Control from Micro Processor
61	TEST5	I	For TEST. Normal time is non connection.
62	CS	I	Chip select Terminal. This terminal "L" : LC7866 is active (Internal Resistor : Pull Down)
63	XIN	I	Connection Terminal of crystal oscillation (16.9344MHz)
64	XOUT	O	Connection Terminal of crystal oscillation (16.9344MHz)

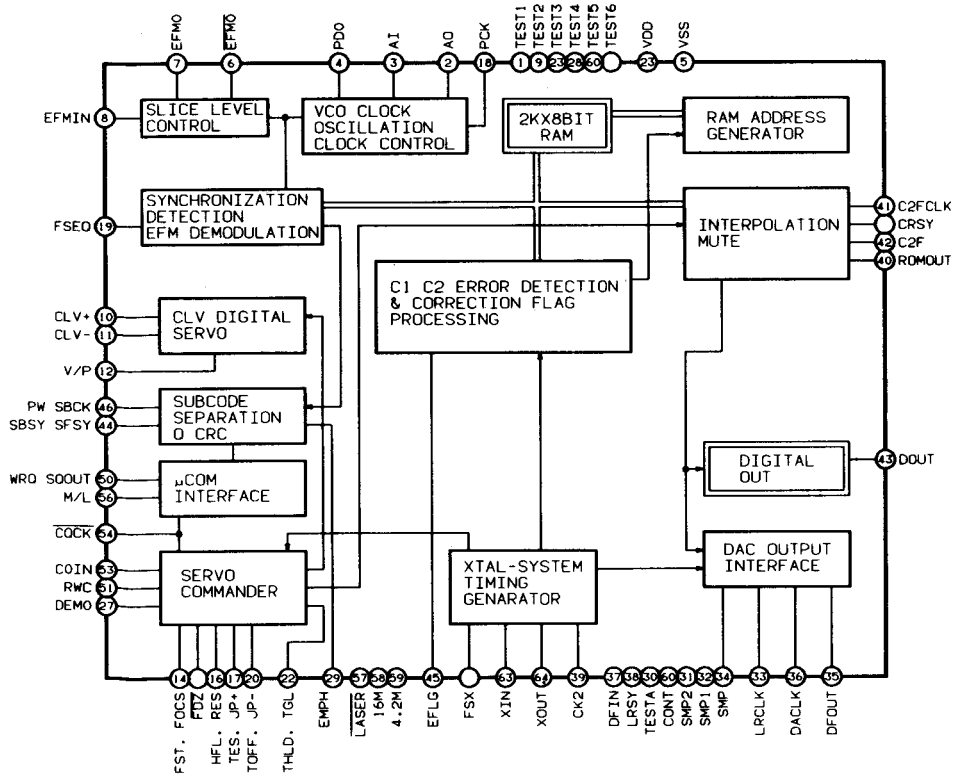

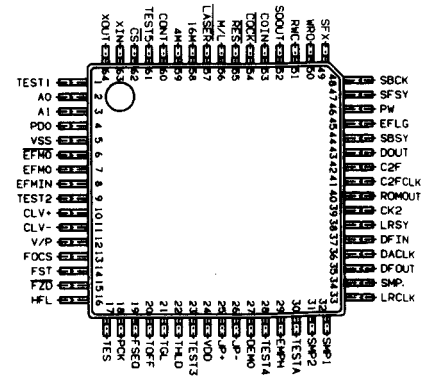

IC BLOCK DIAGRAM (CD)

IC105 SM5870DS (D / A Converter)

No.	PIN NAME	I/O	FUNCTION
1	XTO	O	Output Terminal of Oscillation
2	XVSS		GND Terminal of Crystal Route (0V)
3	CKSLN	I	Frequency Select of XTI, CKO
4	CKO	O	Oscillation Part, Output of Clock
5	TSTN	I	Test Terminal H = Normal, L = Test Mode
6	NODN	I	
7	ATTN	I	
8	LRCI	I	Sample rate (fs) Clock of Input Data H = L-ch L = R-ch
10	DIN	i	Bit Clock of Input Data
11	DFS1	I	
12	DFS2	I	

ATTN		MODN H	MODN L
	H	Release	Soft Mute Hold
	L	Soft Mute	

DSF2		DSF1 L	DSF1 H
	L	De-Emphasis On 44.1kHz	De-Emphasis Off
	H	De-Emphasis On 48.0kHz	De-Emphasis On 32.0kHz

No.	PIN NAME	I/O	FUNCTION
13	MOTEO	O	Output of nfinity Zero Detector
14	RSTN	I	System Reset H = Normal, L = Reset
15	DVSS		Digital GND Terminal (0V)
16	DVDD		Digital VDD Terminal (5V)
17	AVDD1		Analog VDD Terminal 1 (5V)
18	LO	O	PWM Output of L-channel (+)
19	AVSS1		Analog GND Terminal 1 (0V)
20	LON	O	PWM Output of L-channel (-)
21	AVDD2		Analog VDD Terminal 2 (5V)
22	AVDD3		Analog VDD Terminal 3 (5V)
23	RON	O	PWM Output of R-channel (-)
24	AVSS2		Analog GND Terminal 2 (0V)
25	RO	O	PWM Output of R-channel (+)
26	AVDD		Analog VDD Terminal 4 (5V)
27	XVDD		VDD Terminal of Crystal Route (5V)
28	XTI	I	Input Terminal of Oscillation

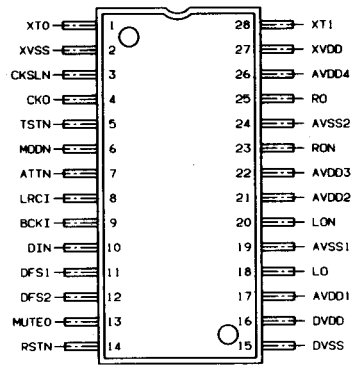

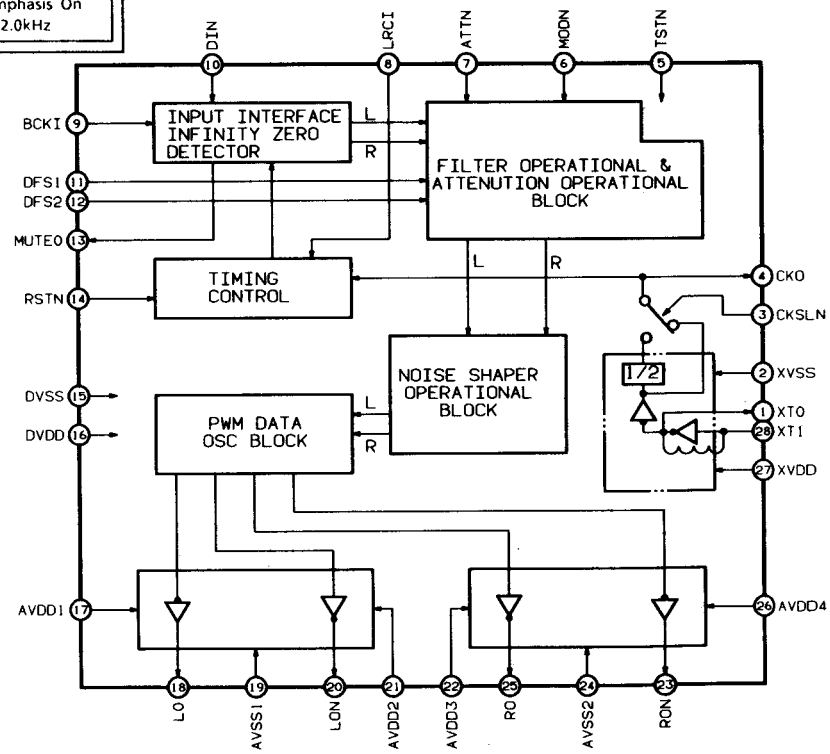

IC106 XRA15218F (Dual Operational Amplifier)

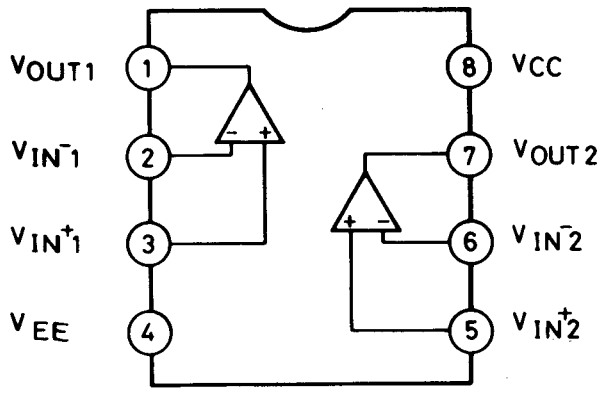

IC BLOCK DIAGRAM (CD & TUNER)

IC107 M5278D05 (3 Terminal Voltage Regulator)

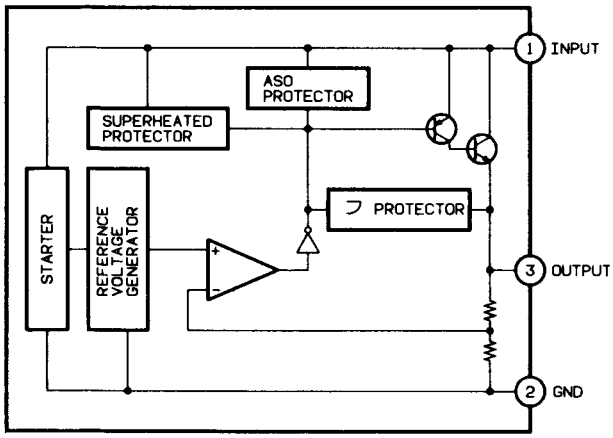

IC108 NJM79L05 (3-Terminal Voltage Regulator)

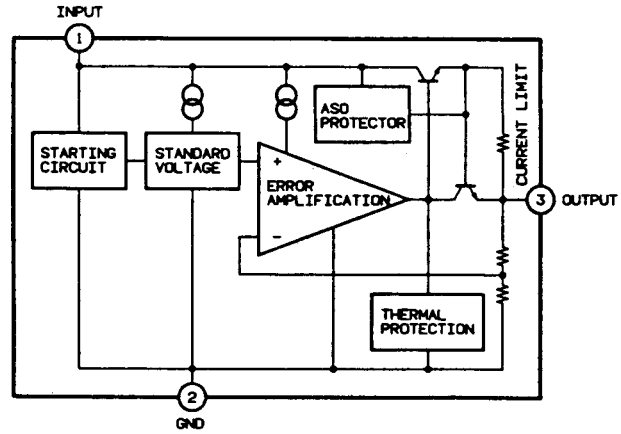

IC109 NJM78L05 (3-Terminal Voltage Regulator)

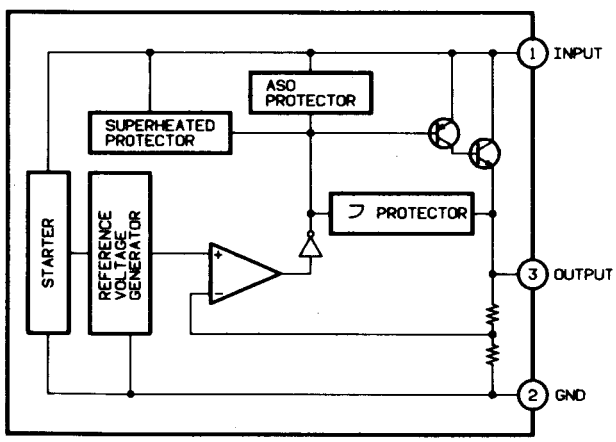

IC201 LA2165 (Tuner IF System)

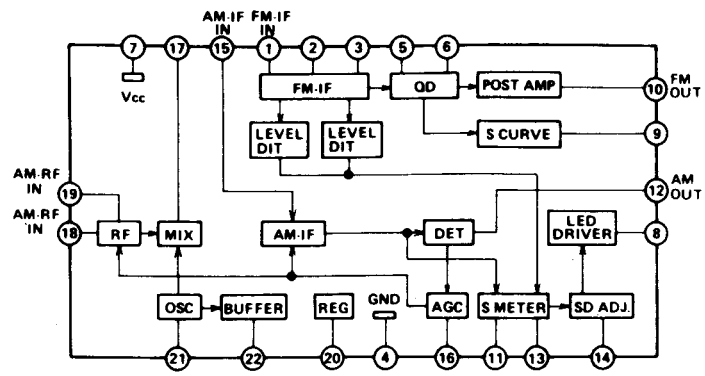

IC202 LA3361 (FM PLL MPX. Stereo Demodulator)

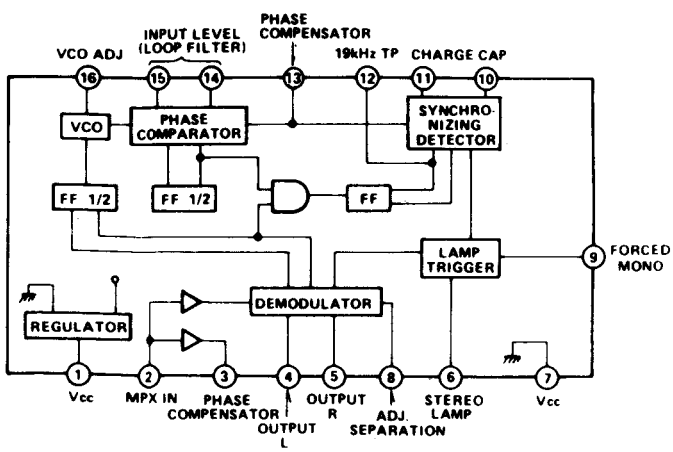

IC203 LM7001 (PLL Frequency Synthesizer)

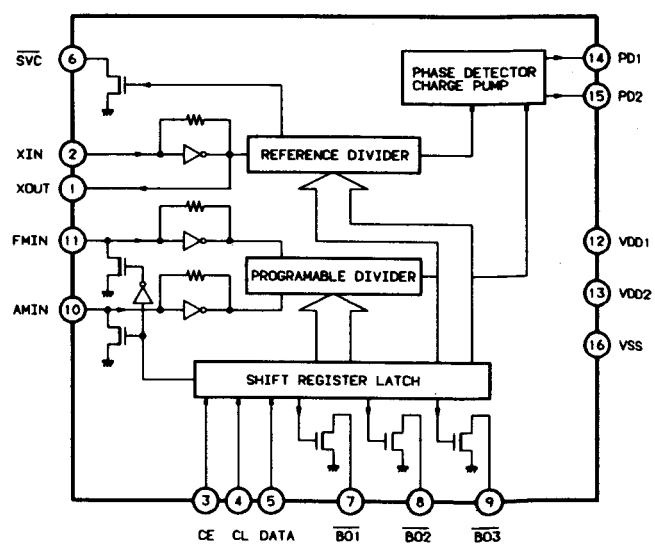

IC BLOCK DIAGRAM (FRONT)

IC251 μPD75306GF-225-3B9 (Tuner & LCD Driveing Micro Processor)

PIN No.	SIGNAL NAME	PORT NAME	DESCRIPTION	I/O	CONNECT
1	SEG12	S12	Segment of Liquid Crystal Display		LCD
2	SEG13	S13	Segment of Liquid Crystal Display		LCD
3	SEG14	S14	Segment of Liquid Crystal Display		LCD
4	SEG15	S15	Segment of Liquid Crystal Display		LCD
5	SEG16	S16	Segment of Liquid Crystal Display		LCD
6	SEG17	S17	Segment of Liquid Crystal Display		LCD
7	SEG18	S18	Segment of Liquid Crystal Display		LCD
8	SEG19	S19	Segment of Liquid Crystal Display		LCD
9	SEG20	S20	Segment of Liquid Crystal Display		LCD
10	SEG21	S21	Segment of Liquid Crystal Display		LCD
11	SEG22	S22	Segment of Liquid Crystal Display		LCD
12	SEG23	S23	Segment of Liquid Crystal Display		LCD
13	SEG24	S24 / BP0	Segment of Liquid Crystal Display		LCD
14	SEG25	S25 / BP1	Segment of Liquid Crystal Display		LCD
15	SEG26	S26 / BP2	Segment of Liquid Crystal Display		LCD
16	SEG27	S27 / BP3	Segment of Liquid Crystal Display		LCD
17	AUTO	S28 / BP4	Auto Tuning Signal ACTIVE : HIGH LEVEL	O	TUNER
18	NC	S29 / BP5	Not Used (Open)	O	OPEN
19	NC	S30 / BP6	Not Used (Open)	O	OPEN
20	NC	S31 / BP7	Not Used (Open)	O	OPEN
21	COM 0	COM0	Common of Liquid Crystal Display		LCD
22	COM 1	COM1	Common of Liquid Crystal Display		LCD
23	COM 2	COM2	Common of Liquid Crystal Display		LCD
24	COM 3	COM3	Common of Liquid Crystal Display		LCD
25	BIAS	BIAS	Bias of Liquid Crystal Display		
26	VLC0	V_{LC0}	Power Supply for Drive of Liquid Crystal Display		
27	VLC1	V_{LC1}	Power Supply for Drive of Liquid Crystal Display		
28	VLC2	V_{LC2}	Power Supply for Drive of Liquid Crystal Display		
29	STEP	P40	AM Step Selection 9kHz (V_{DD}) / 10kHz (V_{SS})	I	TUNER
30	ST	P41	ST Signal ACTIVE : LOW LEVEL	I	TUNER
31	SD	P42	SD Signal ACTIVE : LOW LEVEL	I	TUNER
32	NC	P43	Not Used (Ground)	I	V_{SS}
33	VSS	V_{SS}	Ground		
34	CE (S)	P50	Data Signal from LM7001 (For S Series)	O	TUNER
35	CLK (S)	P51	Data Signal from LM7001 (For S Series)	O	TUNER
36	DO (S)	P52	Data Signal from LM7001 (For S Series)	O	TUNER
37	MONO (S)	P53	Compulsion Monaural (For S Series) ACTIVE : HIGH LEVEL	O	TUNER
38	NC	P00 / INT4	Not Used (Ground)	I	V_{SS}
39	SCK	P01 / SCK	Clock Signal In from Main Micro Processor (μPD65117)	I	MAIN μCON
40	NC	P02 / SO / SB0	Not Used (Ground)		V_{SS}
41	SI	P03 / SI / SB1	Data In from Main Micro Processor (μPD65117)	I	MAIN μCON
42	NC	P10 / INT0	Not Used (Ground)	I	V_{SS}
43	NC	P11 / INT1	Not Used (Ground)	I	V_{SS}
44	NC	P12 / INT2	Not Used (Ground)	I	V_{SS}
45	NC	P13 / T10	Not Used (Ground)	I	V_{SS}
46	WIDE	P20 / PT100	Select Signal for AM Signal Type Wide (HIGH) / Narrow (LOW)	O	TUNER
47	PCON (S)	P21	Tuner Power Signal (For S Series) ACTIVE : HIGH LEVEL	O	TUNER
48	MUTE	P22 / PCL	Tuner Mute Signal ACTIVE : HIGH LEVEL	O	TUNER
49	BUSY	P23 / BUZ	Busy Signal Out to Main Micro Processor (μPD65117)	O	MAIN μCON
49	BUSY	P23 / BUZ	Busy Signal Out to Main Micro Processor (μPD65117)	O	MAIN μCON
50	S0	P30 / LCDCL	Initial Set for User = Country (Open or Ground)	I	
51	S1	P31 / SYNC	Initial Set for User = Country (Open or Ground)	I	
52	S2	P32	Initial Set for User = Country (Open or Ground)	I	
53	S3 (FM MUTE)	P33	Select Signal for FM Auto Mute SET (Open) / NOT (V_{SS})	I	
54	VDD	V_{DD}	Power Supply +5V		V_{DD}
55	NC	XT1	Not Used (Ground) OSC X'tal Terminal for Main Clock	I	V_{SS}
56	NC	XT2	Not Used (Open) OSC X'tal Terminal for Main Clock	O	
57	NC	NC	Non Connection		
58	X1	XI	X'tal In (4.194304 MHz)	I	
59	X2	XO	X'tal Out (4.194304 MHz)	O	
60	S4 (12H / 24H)	P60 / KR0	Select Signal for CLOCK 24H (Open) / 12H (V_{SS})	I	
61	S5 (AM IF)	P61 / KR1	Select Signal for AM IF SET (Open) / NOT (V_{SS})	I	TUNER
62	S6 (D / S)	P62 / KR2	Select Signal for D & S Series SET (Open) / NOT (V_{SS})	I	
48	MUTE	P22 / PCL	Tuner Mute Signal ACTIVE : HIGH LEVEL	O	TUNER
63	MONO (D)	P63 / KR3	Compulsion Monaural (For D Series) ACTIVE : HIGH LEVEL	O	TUNER
64	DO (D)	P70 / KR4	Data Signal from LM7001 (For D Series)	O	TUNER
65	CLK (D)	P71 / KR5	Data Signal from LM7001 (For D Series)	O	TUNER

IC BLOCK DIAGRAM (FRONT)

PIN No.	SIGNAL NAME	PORT NAME	DESCRIPTION	I/O	CONNECT
66	CE (D)	P72 / KR6	Data Signal from LM7001 (For D Series)	O	TUNER
67	PCON (D)	P73 / KR7	Tuner Power Signal (For D Series) ACTIVE : HIGH LEVEL	O	TUNER
68	RESET	RESET	System Reset Signal		RESET CIRCUIT
69	SEG0	S0	Segment of Liquid Crystal Display		LCD
70	SEG1	S1	Segment of Liquid Crystal Display		LCD
71	SEG2	S2	Segment of Liquid Crystal Display		LCD
72	SEG3	S3	Segment of Liquid Crystal Display		LCD
73	SEG4	S4	Segment of Liquid Crystal Display		LCD
74	SEG5	S5	Segment of Liquid Crystal Display		LCD
75	SEG6	S6	Segment of Liquid Crystal Display		LCD
76	SEG7	S7	Segment of Liquid Crystal Display		LCD
77	SEG8	S8	Segment of Liquid Crystal Display		LCD
78	SEG9	S9	Segment of Liquid Crystal Display		LCD
79	SEG10	S10	Segment of Liquid Crystal Display		LCD
80	SEG11	S11	Segment of Liquid Crystal Display		LCD

LCD

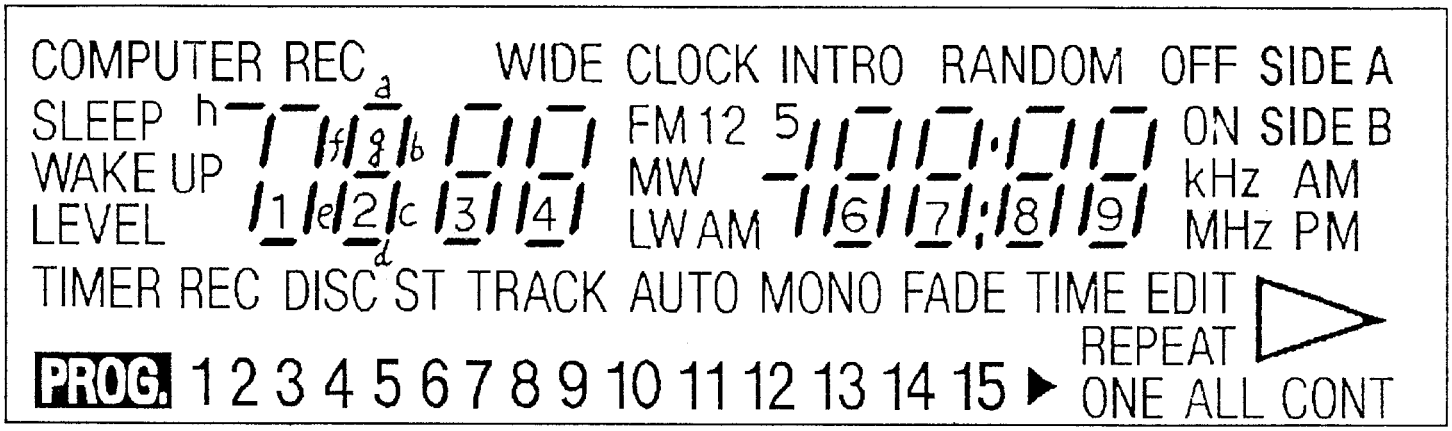

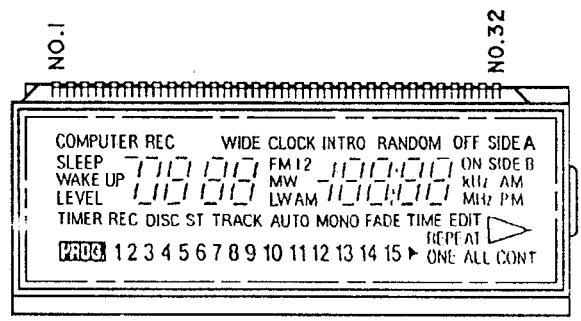

NO.	COM. 1	COM. 2	COM. 3	COM. 4
1	CONT	ALL	ONE	REPEAT
2	13	14	15	▶
3	12	11	10	9
4	5	6	7	8
5	4	3	2	1
6	SLEEP	WAKE UP	TIMER	REC
7	COMP. REC	LEVEL	DISC	PROG.
8	1h	1a.e.f	1b.c	1d
9	2f	2g	2e	2d
10	2a	2b	2c	ST
11	3f	3g	3e	3d
12	3a	3b	3c	TRACK
13	4f	4g	4e	4d
14	4a	4b	4c	AUTO
15	WIDE	FM	MW	LW
16	CLOCK	1 (FM)	2 (FM)	AM

NO.	COM. 1	COM. 2	COM. 3	COM. 4
17	INTRO	5b.c	5g	
18	6f	6g	6e	6d
19	6a	6b	6c	MONO
20	7f	7g	7e	7d
21	7a	7b	7c	FADE
22	RANDM	:		TIME
23	8f	8g	8e	8d
24	8a	8b	8c	EDIT
25	9f	9g	9e	9d
26	9a	9b	9c	▷
27	OFF	ON	KHz	MHz
28	DISE A	DISE B	AM	PM
29	COM. 1			
30		COM. 2		
31			COM. 3	
32				COM. 4

VOLTAGES OF IC (CD)

(Unit : Volt)

IC101 LA9210M

Measuring Pin No.	1	2	3	4	5	6	7	8	9	10	11	12	13	14	15	16
Stop Mode	0	-5.0	0	0	0	0	0	0	0	2.59	2.54	2.55	0	0	0	0
Play Mode	0	-5.0	Fluc	Fluc	Fluc	Fluc	Fluc	0	0	Fluc	Fluc	Fluc	Fluc	Fluc	Fluc	Fluc
Measuring Pin No.	17	18	19	20	21	22	23	24	25	26	27	28	29	30	31	32
Stop Mode	0	0	0	0	Fluc	Fluc	0	0	0	0	Fluc	2.43	0	0	0	-5.0
Play Mode	Fluc	Fluc	Fluc	Fluc	Fluc	Fluc	Fluc	Fluc	0	Fluc	Fluc	Fluc	Fluc	Fluc	Fluc	-5.0
Measuring Pin No.	33	34	35	36	37	38	39	40	41	42	43	44	45	46	47	48
Stop Mode	0	0	0	5.0	4.39	0	0	0	0	0	0	0	4.97	4.92	4.07	4.07
Play Mode	Fluc	Fluc	Fluc	5.0	Fluc	Fluc	Fluc	Fluc	0	Fluc	Fluc	Fluc	Fluc	Fluc	Fluc	Fluc
Measuring Pin No.	49	50	51	52	53	54	55	56	57	58	59	60	61	62	63	64
Stop Mode	4.07	0	0	0	2.52	2.49	2.50	5.0	2.51	2.51	2.54	3.92	2.60	2.33	4.92	0
Play Mode	Fluc	Fluc	Fluc	Fluc	Fluc	Fluc	Fluc	5.0	Fluc	Fluc	Fluc	Fluc	Fluc	Fluc	Fluc	0
Measuring Pin No.	65	66	67	68	69	70	71	72	73	74	75	76	77	78	79	80
Stop Mode	0	0.4	-0.4	0	-0.5	-0.5	0	-0.5	0	4.82	-4.97	4.83	5.0	0	0	0
Play Mode	0	Fluc	Fluc	Fluc	Fluc	Fluc	0	Fluc	Fluc	Fluc	Fluc	Fluc	5.0	Fluc	Fluc	0

IC102 LA6524

Measuring Pin No.	1	2	3	4	5	6	7	8	9	10
Play Mode	Fluc	Fluc	-11	Fluc	Fluc	Fluc	Fluc	10	Fluc	Fluc

Fluc : Fluctuation

IC103 μPD75116

Measuring Pin No.	1	2	3	4	5	6	7	8	9	10	11	12	13	14	15	16
Stop Mode	0			(0)	(0)	(0)										(0)
Play Mode	4.8	5.0	0	(5.0)	(5.0)	(5.0)	5.0	2.5	2.5	4.7	5.0	5.0	0	0	0	(4.8)
Measuring Pin No.	17	18	19	20	21	22	23	24	25	26	27	28	29	30	31	32
Stop Mode							(0)	0								
Play Mode	0	0	0	0	0	5.0	(5.0)	Fluc	2.5	0	4.7	4.8	0	5.0	5.0	5.0
Measuring Pin No.	33	34	35	36	37	38	39	40	41	42	43	44	45	46	47	48
Stop Mode					(0)		(5.0)					0				
Play Mode	5.0	5.0	0	0	(5.0)	0	(0)	0	0	0	5.0	4.0	5.0	5.0	0	0
Measuring Pin No.	49	50	51	52	53	54	55	56	57	58	59	60	61	62	63	64
Stop Mode													(0)			0
Play Mode	0	0	0	0	0	5.0	5.0	5.0	5.0	5.0	5.0	5.0	(5.0)	0	5.0	5.0

NOTES :

PIN 4 : Stop Mode = OTHER
Play Mode = TAPE & TUNER

PIN 5 : Stop Mode = OTHER
Play Mode = CD & PHONO

PIN 6 : Stop Mode = OTHER
Play Mode = TUNER, AV & CD

PIN 16 : Stop Mode = OTHER
Play Mode = WAIT THE SYNCRO

PIN 23 : Stop Mode = ON THE DISC
Play Mode = ON THE NO DISC

PIN 37 : Stop Mode = OTHER
Play Mode = CLOSING THE TRAY

PIN 39 : Stop Mode = OTHER
Play Mode = OPENING THE TRAY

PIN 62 : Stop Mode = EMPHASIS ON
Play Mode = EMPHASIS OFF

IC104 LC7866E

Measuring Pin No.	1	2	3	4	5	6	7	8	9	10	11	12	13	14	15	16
Stop Mode	0	2.31	2.34	2.51	0	2.46	2.48	2.52	0	0	0	4.92	0	2.51	4.07	4.07
Play Mode	Fluc	Fluc	Fluc	Fluc	0	Fluc	Fluc	Fluc	Fluc	Fluc	Fluc	Fluc	Fluc	Fluc	Fluc	Fluc
Measuring Pin No.	17	18	19	20	21	22	23	24	25	26	27	28	29	30	31	32
Stop Mode	4.07	2.5	0	4.95	4.97	0	0	5.0	0	0	0	0	0	5.0	1.25	1.25
Play Mode	Fluc	Fluc	Fluc	Fluc	Fluc	Fluc	Fluc	5.0	Fluc	Fluc	Fluc	Fluc	Fluc	5.0	Fluc	Fluc
Measuring Pin No.	33	34	35	36	37	38	39	40	41	42	43	44	45	46	47	48
Stop Mode	2.5	2.5	0	2.5	0	2.5	2.41	1.63	2.5	4.5	2.52	Fluc	2.28	0	2.5	0
Play Mode	Fluc	Fluc	Fluc	Fluc	Fluc	Fluc	Fluc	Fluc	0(4.5)	Fluc	Fluc	Fluc	Fluc	Fluc	Fluc	Fluc
Measuring Pin No.	49	50	51	52	53	54	55	56	57	58	59	60	61	62	63	64
Stop Mode	2.5	Fluc	Fluc	Fluc	0	5.0	4.48	0	4.92	Fluc	2.33	4.93	0	0	2.28	2.47
Play Mode	Fluc	Fluc	Fluc	Fluc	0	5.0	Fluc	0	Fluc	Fluc	Fluc	Fluc	Fluc	0	Fluc	Fluc

IC105 SM5870DS

Measuring Pin No.	1	2	3	4	5	6	7	8	9	10	11	12	13	14	15	16
Play Mode	3.0	0	0	0	5.0	5.0	5.0	2.5	2.4	1.6	5.0	0	0	4.8	0	5.0
Measuring Pin No.	17	18	19	20	21	22	23	24	25	26	27	28				
Play Mode	5.0	2.4	0	2.4	5.0	5.0	2.4	0	2.4	5.0	5.0	1.3				

IC106 XRA15218F

Measuring Pin No.	1	2	3	4	5	6	7	8
Play Mode	Fluc	1.3	1.3	-5.0	1.3	1.3	Fluc	5.0

VOLTAGES OF IC & TRANSISTOR (CD)

Transistor No.	IC107			IC108			IC109		
Measuring Pin Name	1 (OUT)	2 (GND)	3 (IN)	1 (COM)	2 (IN)	3 (OUT)	1 (OUT)	2 (GND)	3 (IN)
Stop Mode	5.0	0	11	-11.5	0	-5.0	5.6	0.6	12
Play Mode	5.0	0	10	-11.5	0	-5.0	5.6	0.6	12

TRANSISTOR

(Unit : Volt)

Transistor No.	Q101			Q102			Q103			Q1301		
Measuring Pin Name	E	C	B	E	C	B	E	C	B	E	C	B
Stop Mode	5.0	0	4.7	2.0	2.5	2.5	0	0	0.6			
Play Mode	3.6	1.8	3.0				0	4.9	0	5.0	5.0	0
Transistor No.	Q1302			Q1303			Q1304			Q1305		
Measuring Pin Name	E	C	B	E	C	B	E	C	B	E	C	B
Stop Mode				4.8	4.8	0	0	0	0.6	5.0	5.0	4.3
Play Mode	0	5.0	0	0	-5.0	0	0	0	0.6	5.0	5.0	4.3
Transistor No.	Q1500			Q1501								
Measuring Pin Name	E	C	B	E	C	B						
Stop Mode	0	0	0.6	0	0	0.6						
Play Mode	0	0	-5.0	0	0	-5.0						

MEMO

SCHEMATIC DIAGRAM (FRONT)

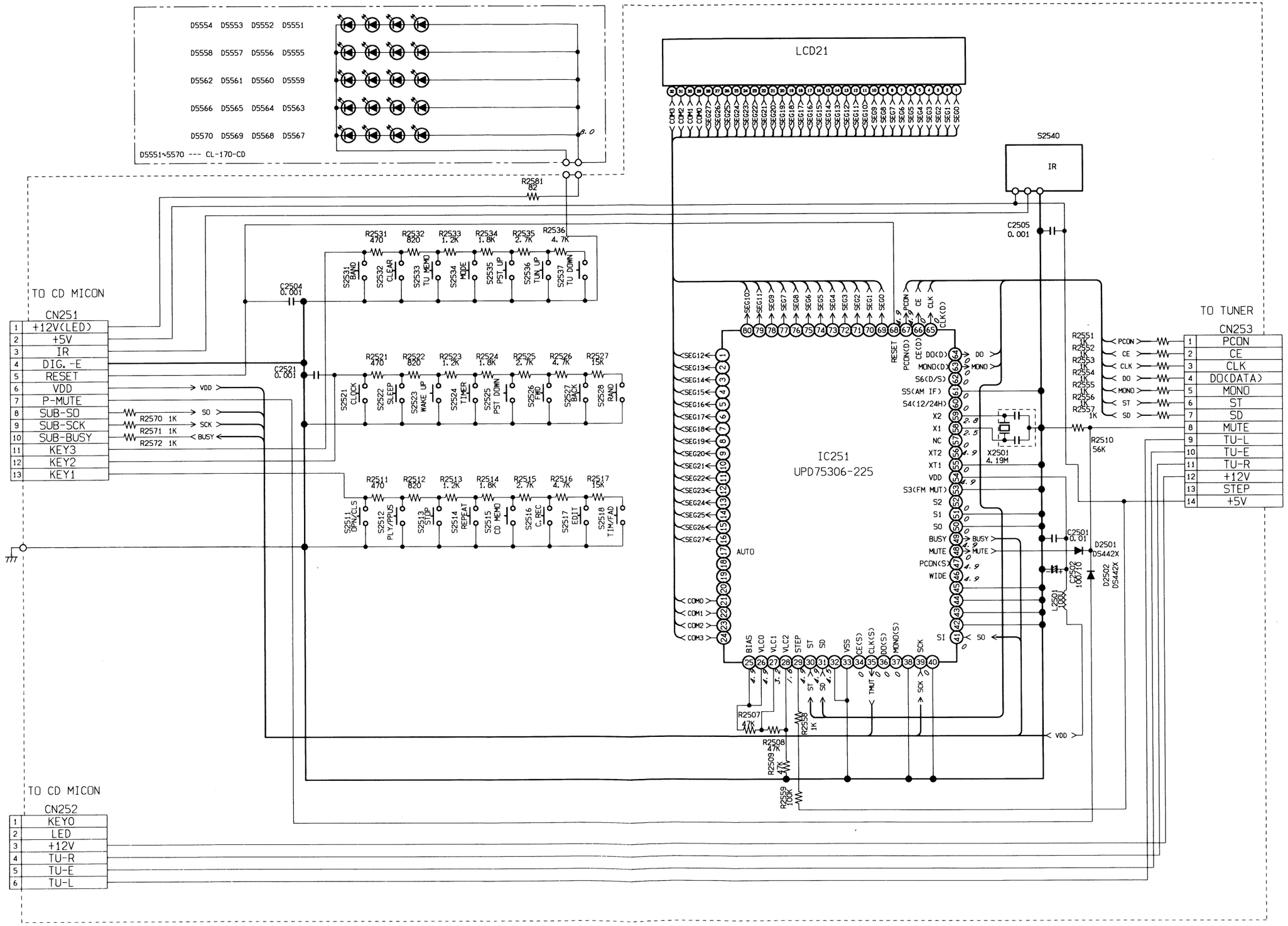

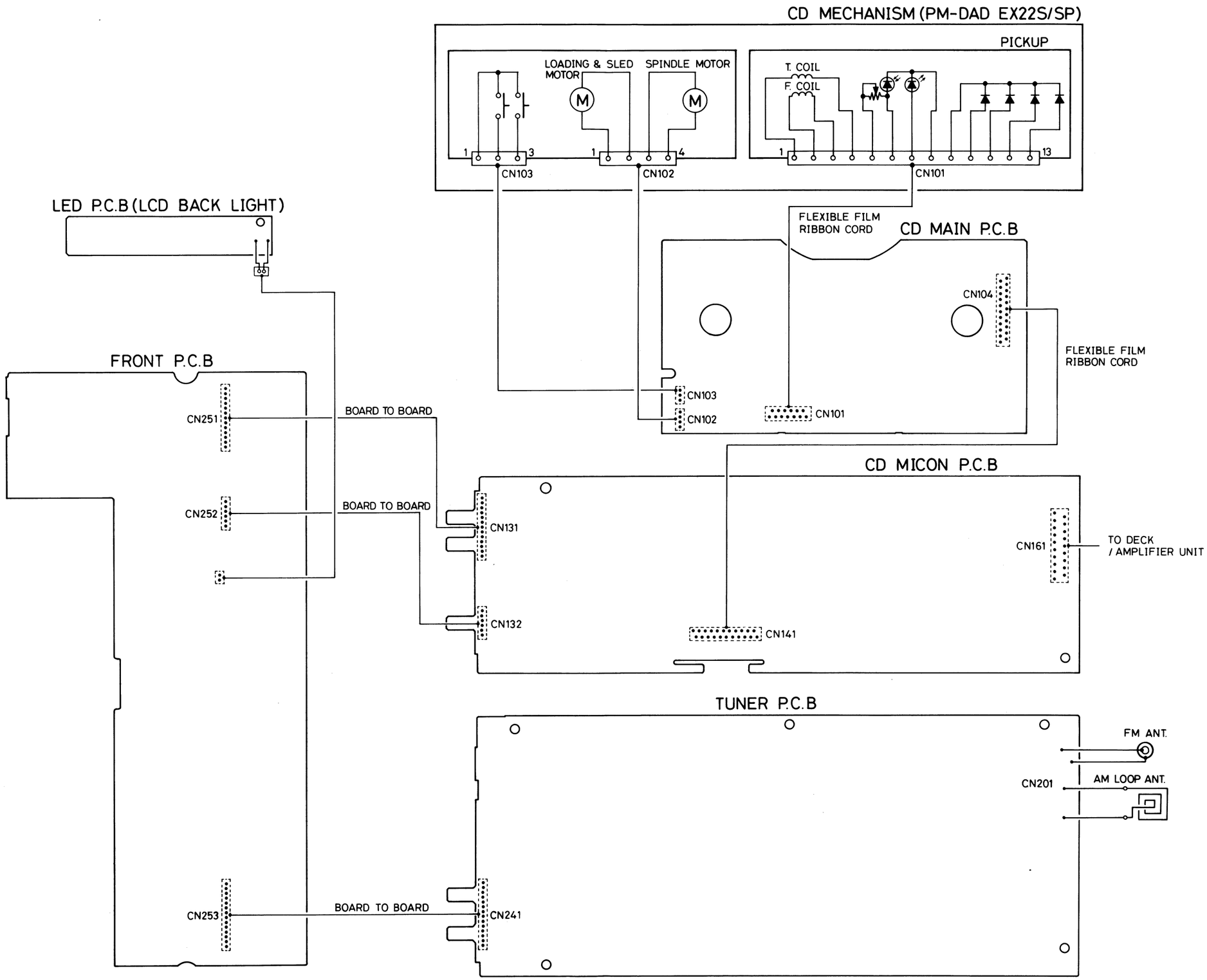
CD MECHANISM (PM-DAD EX22S/SP)
PICKUP
LOADING & SLED MOTOR
SPINDLE MOTOR
T. COIL
F. COIL
M
M
1
3
1
4
1
13
CN103
CN102
CN101
LED P.C.B (LCD BACK LIGHT)
FLEXIBLE FILM RIBBON CORD
CD MAIN P.C.B
CN104
FLEXIBLE FILM RIBBON CORD
CN103
CN102
CN101
FRONT P.C.B
CN251
BOARD TO BOARD
CD MICON P.C.B
CN252
BOARD TO BOARD
CN131
CN161
TO DECK / AMPLIFIER UNIT
CN132
CN141
TUNER P.C.B
FM ANT.
CN201
AM LOOP ANT.
CN253
BOARD TO BOARD
CN241

SCHEMATIC DIAGRAM (CD)

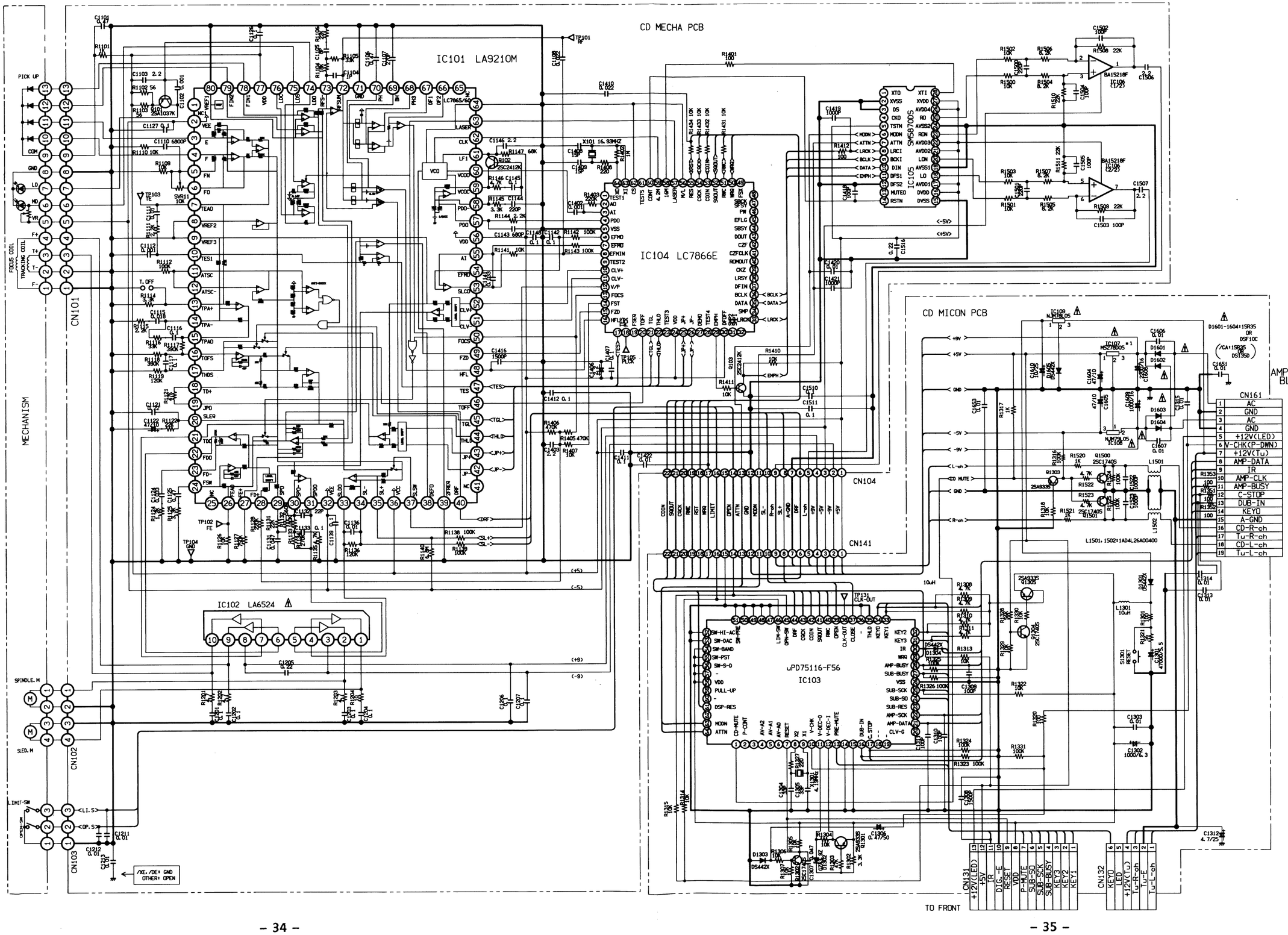

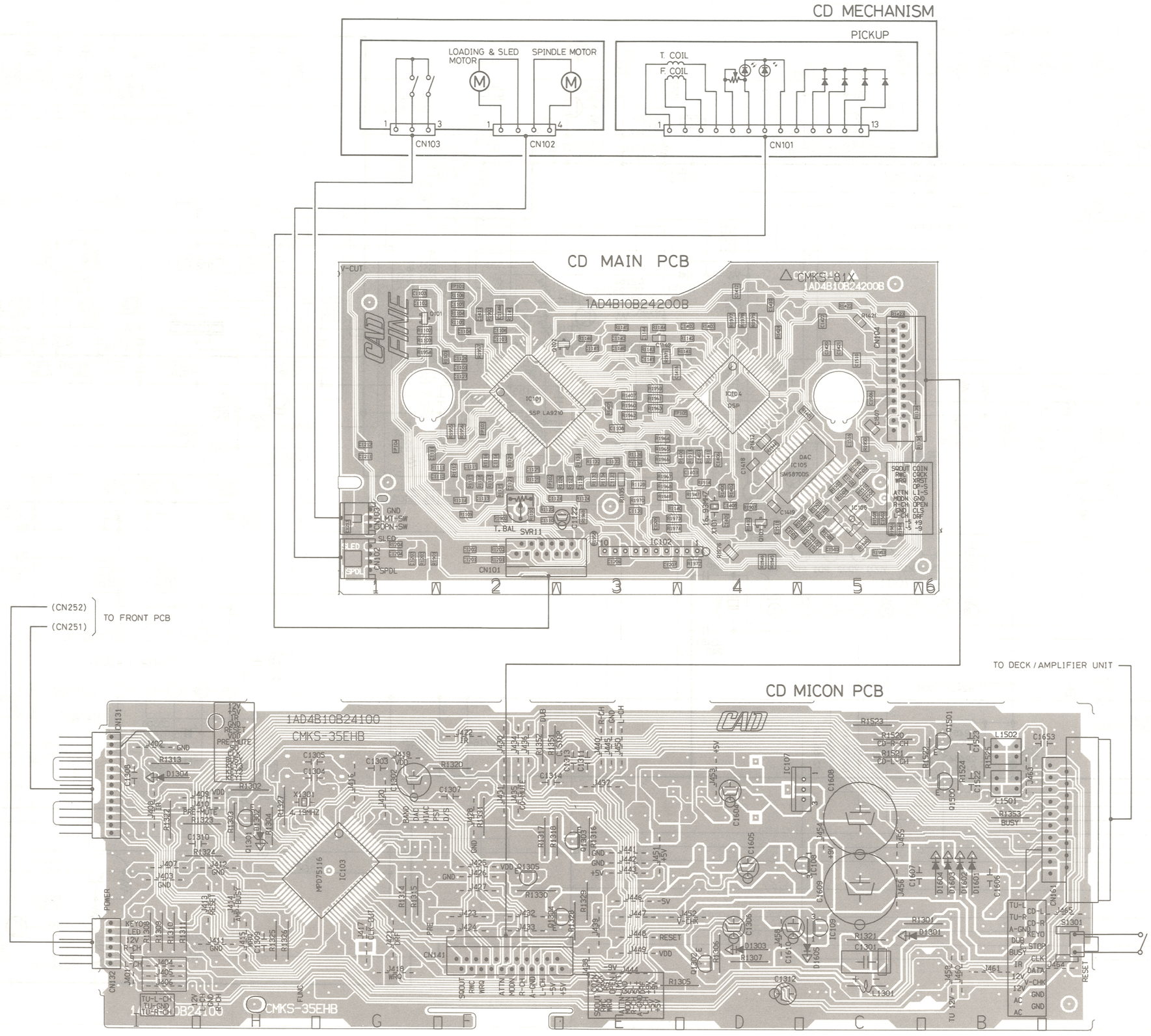
CD MECHANISM
PICKUP
LOADING & SLED MOTOR
SPINDLE MOTOR
T. COIL
F. COIL
CN103
CN102
CN101
CD MAIN PCB
1AD4B10B24200B
CMKS-81X
IC101
SSP LA9210
IC104
DSP
IC105
DAC
SM5870DS
IC102
T. BAL SVR11
CN101
(CN252)
(CN251)
TO FRONT PCB
TO DECK / AMPLIFIER UNIT
CD MICON PCB
1AD4B10B24100
CMKS-35EHB
IC103
MPD75116
CN131
CN132
CN141
CN161

SCHEMATIC DIAGRAM (TUNER)

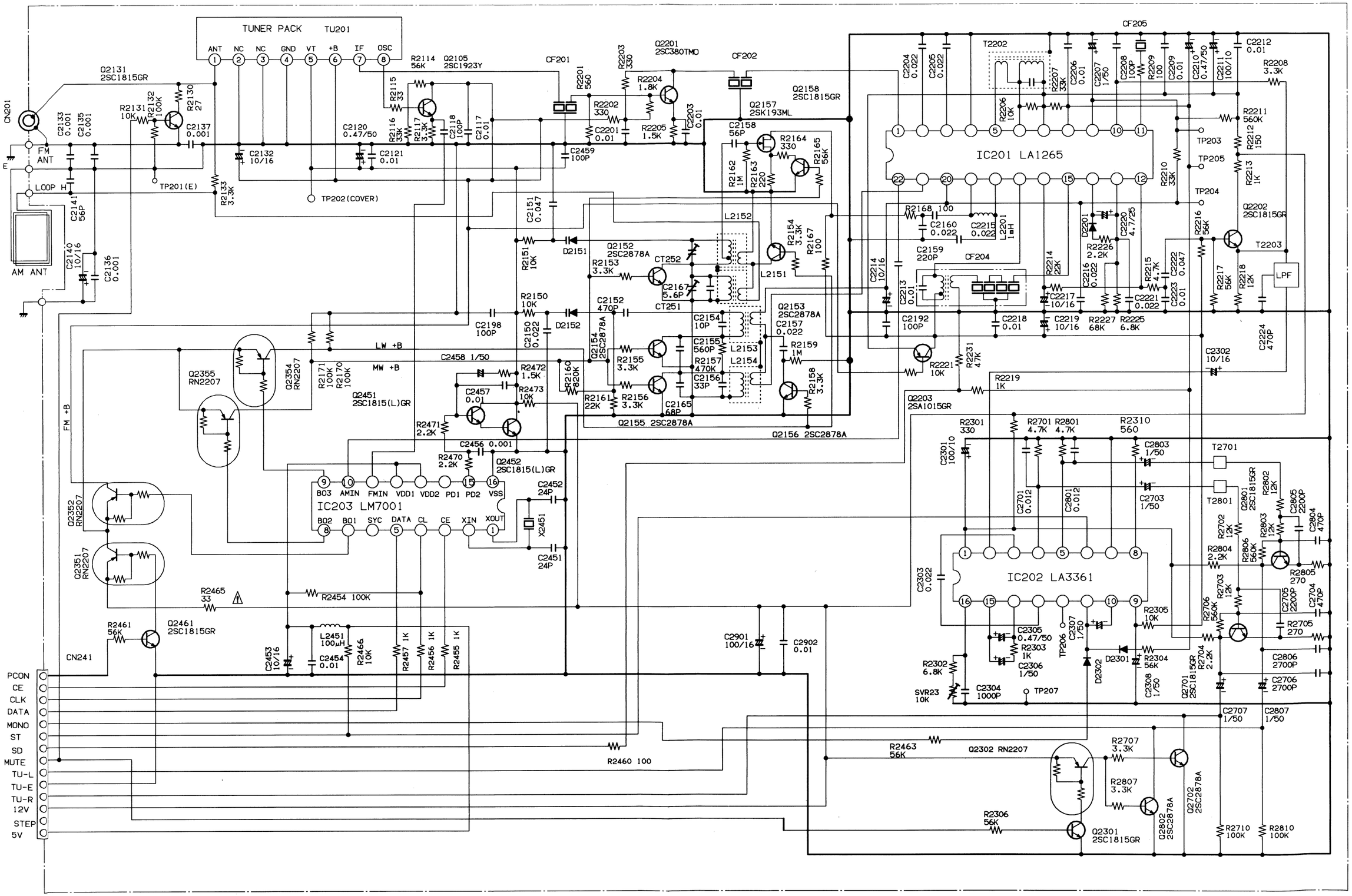

WIRING DIAGRAM (TUNER & FRONT)

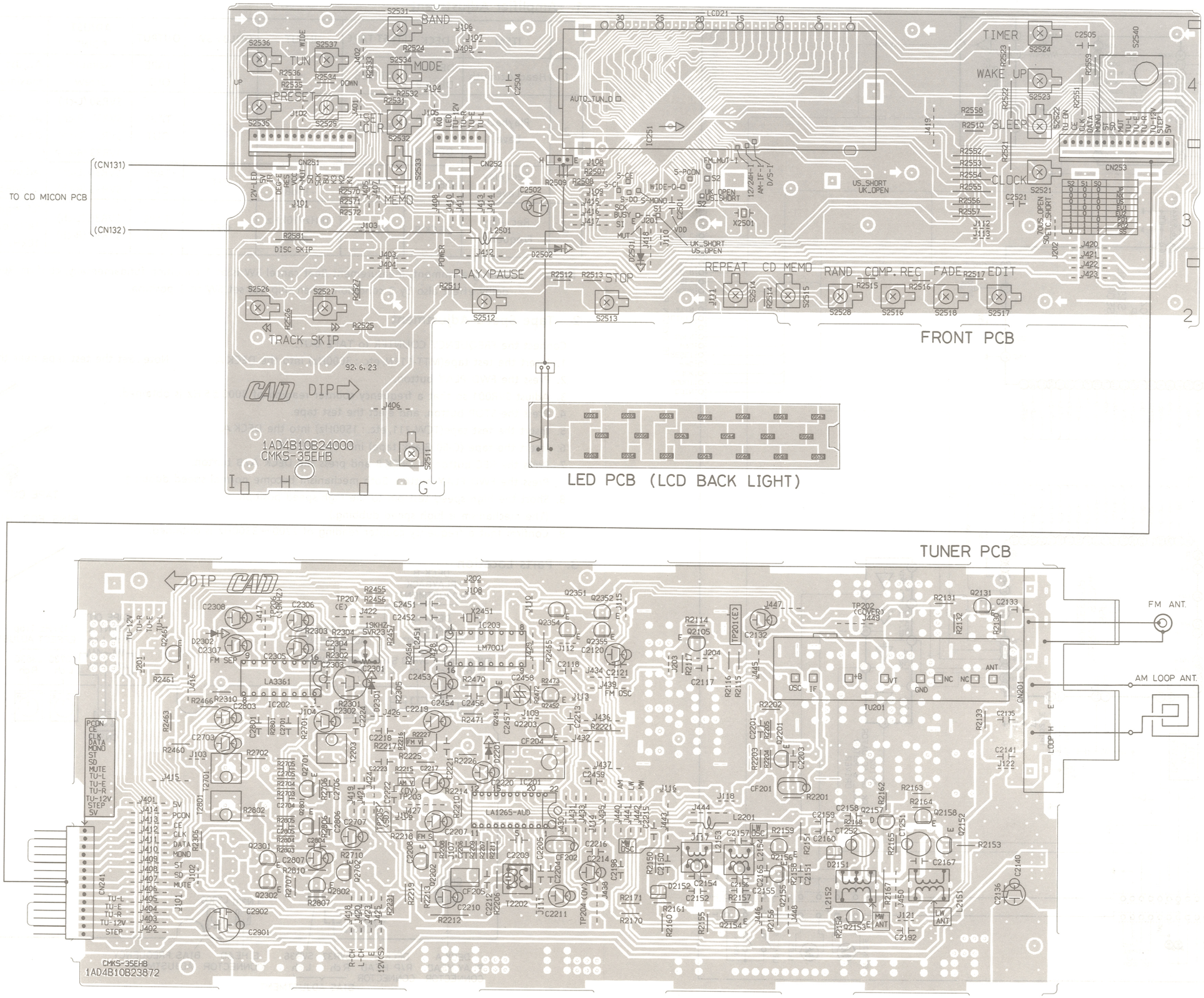

BLOCK DIAGRAM (CD)

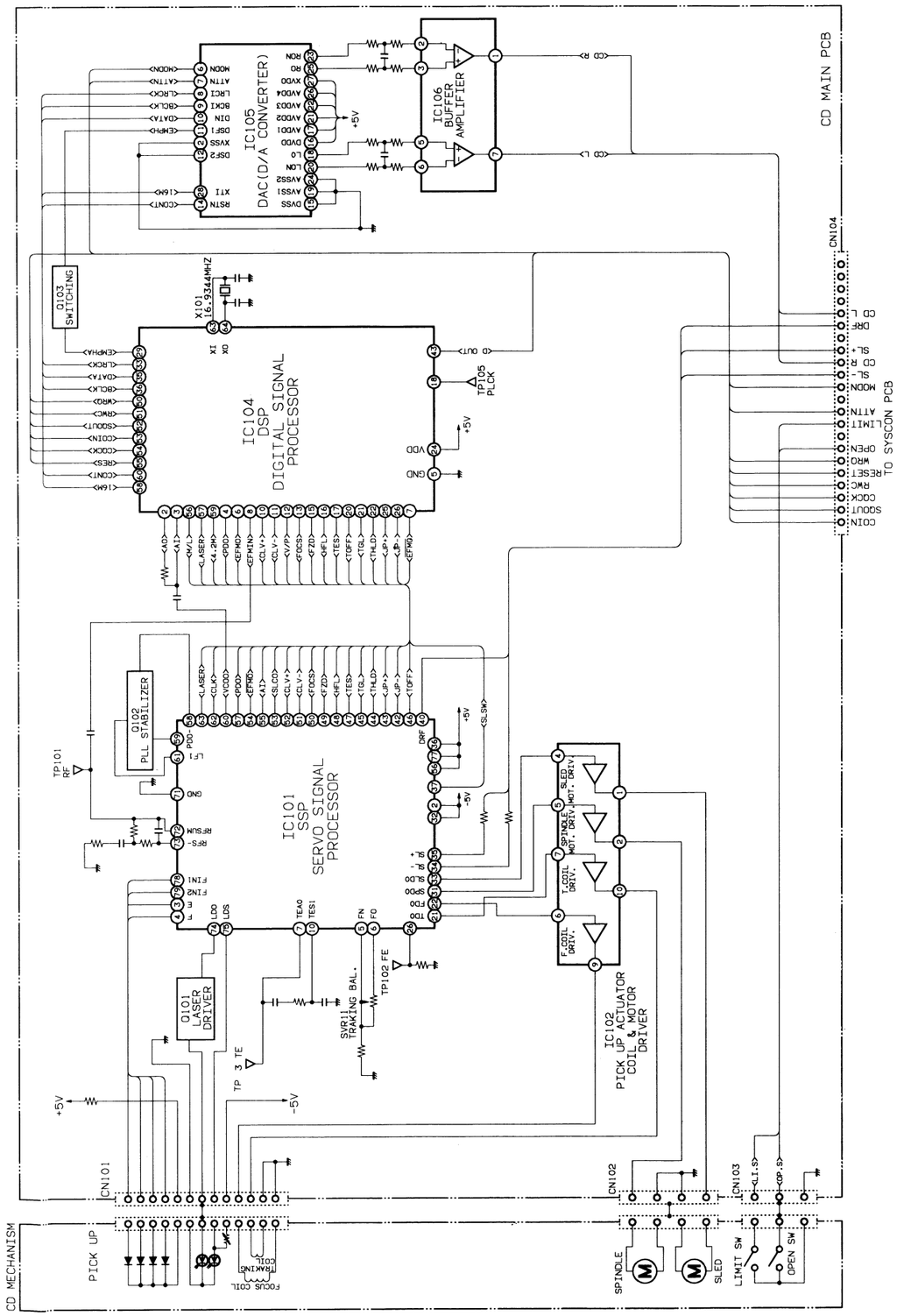

TAPE DECK / AMPLIFIER UNIT

ADJUSTMENT OF DECK & TORQUE

1. Amplifier Adjustment

	ITEM	DECK	TEST TAPE	INPUT	DOLBY SW	OUTPUT	ADJUST POINT	REMARKS
1	Head Azimuth	DECK A DECK B	VTT738	-	OFF	TAPE OUT	Azimuth Screw	Adjust so as 10kHz output become maximum.
2	Playback Level	DECK A DECK B	TCC130	-	OFF	TAPE OUT	SVR30 (L-ch) SVR31 (R-ch) SVR32 (L-ch) SVR33 (R-ch)	Adjust so as TAPE OUT output become 0.54V.
3	Rec / Play Level	DECK A	AC224	1kHz -18dB	OFF	TAPE OUT	SVR34 (L-ch) SVR35 (R-ch)	Adjust SVR so as Monitor o/p = R/P Level = 0dB ± 1dB.
4	Rec / Play Frequency	DECK B	AC224	1kHz /10kHz -28dB	OFF	TAPE OUT	SVR36 (L-ch) SVR37 (R-ch)	R/P signal, set frequency characteristic 1kHz output to 0dB. Adjust SVR so as 10kHz output become ±1dB.

Note. 1. During alignment, measurement Beat cancel SW is at 1 condition fundamentally, confirm Rec / Play frequency characteristic, dolby effect also by 2 condition, when ship out set SW to 1 position.

2. Tape Speed Adjustment

Connect the FREQUENCY COUNTER to TAPE OUT.

1. Insert the test tape(MTT-111N, etc. : 3000Hz) into the DECK A.
2. Press the FWD PLAY button.
3. Adjust SVR001 so that a frequency counter reading of 3000 ± 5 Hz is obtained.
4. Press the STOP button, and eject the test tape.
5. Insert the test tape(TCW-211, etc. : 1500Hz) into the DECK A.
6. Insert the tape (C-60 Blank tape) into the DECK B.
7. Press the REC button of DECK B and press the DECK A / B button.
   Press the FWD PLAY button. Both mechanism become normal speed dubbing.
8. Short the high speed test pin to the high speed position.
   (The mechanism is high speed dubbing.)
9. Confirm that a frequency counter reading of 2700 ~ 3300Hz is obtained.

Note : Set the test tape near the tape end.

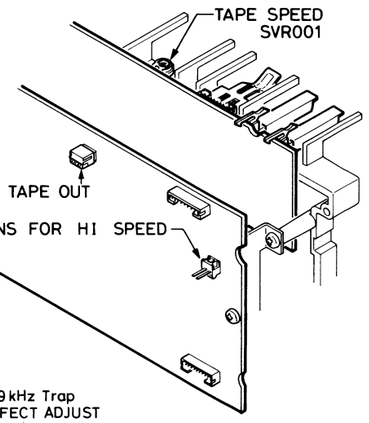

3. Parts Location

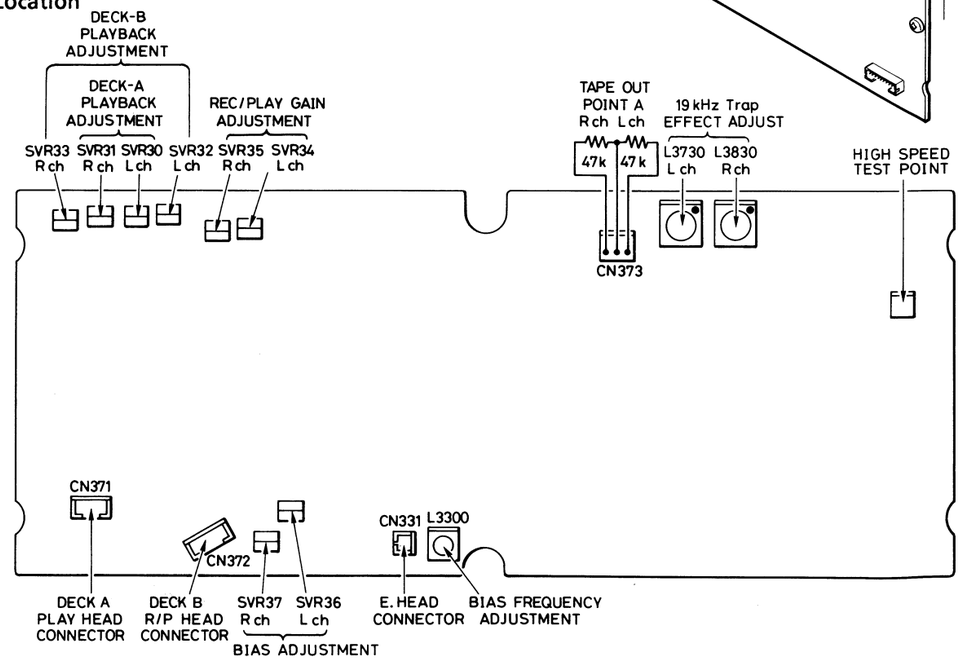

ADJUSTMENT OF DECK & TORQUE

4. Torque Measurements

ITEM	TAKE-UP TORQUE	BACK TENSION	TAPE TENSION
Test cassette	PLAY :TW2111(FWD) PLAY :TW2121(REV) F.FWD / REW;TW2231	PLAY :TW2111(FWD) PLAY :TW2121(REV) REW:Torque Gage	Driving power cassette: TW-2412(FWD) TW-2422(REV)
PLAY	30 ~ 60gr.cm	2.0 ~ 5.0gr.cm	> 80g
F.FWD	70 ~ 140gr.cm	-	
REW	70 ~ 140gr.cm	-	

5. Replacement of Head

Lead Connection Method of Rotary Head

1. Fix the leads from the head at the stem with the rubber adhesives.
2. Twist the fixed leads.

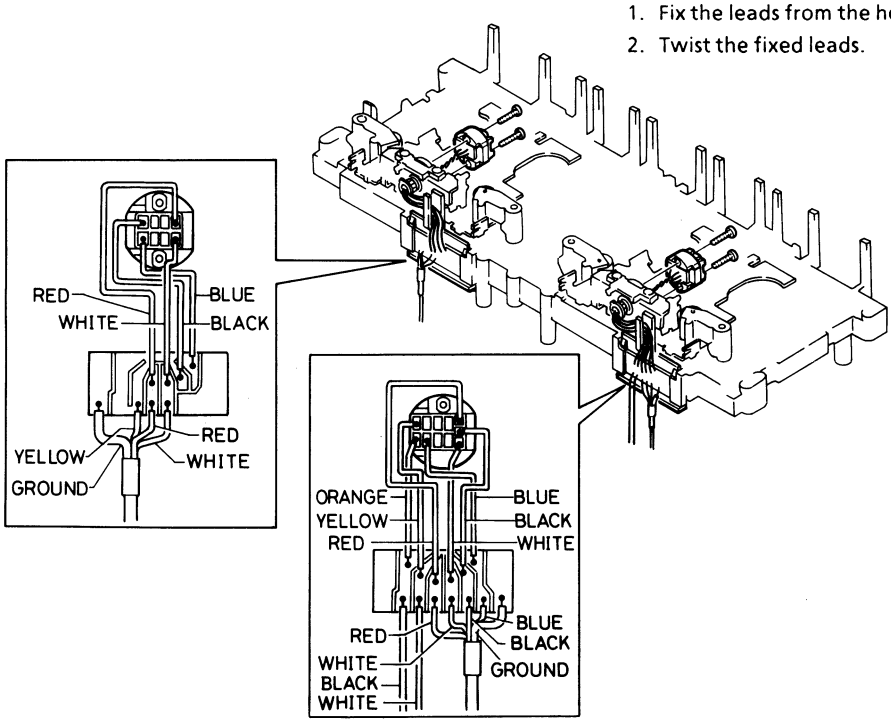

6. Replacement of Motor and Belt

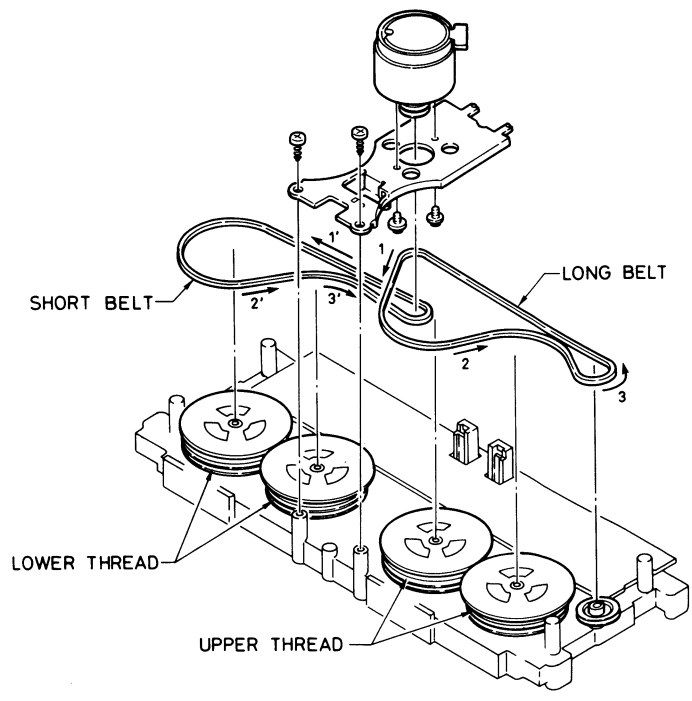

EXPLODED VIEW (TAPE DECK & AMPLIFIER UNIT)

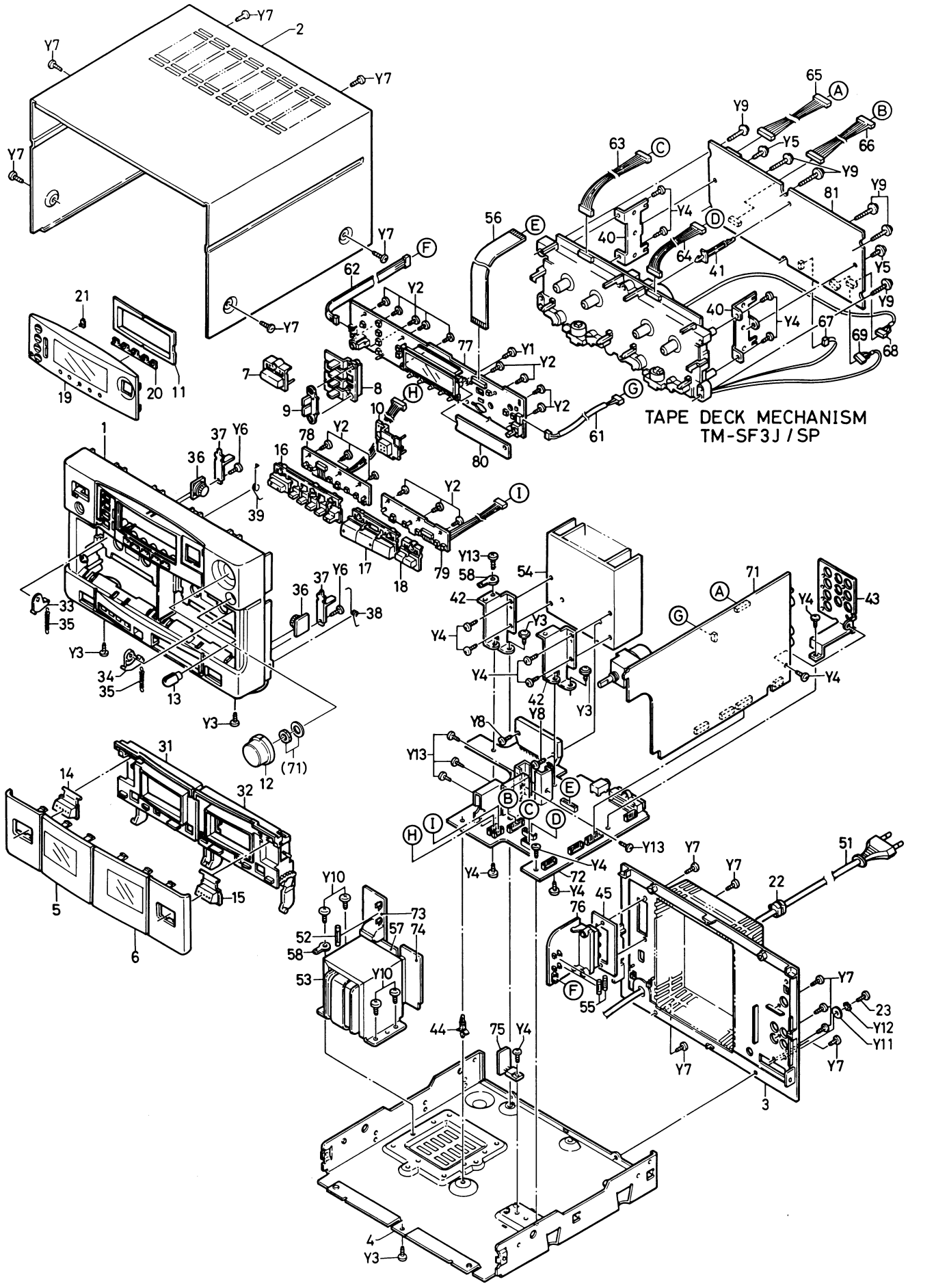

PRODUCT SAFETY NOTICE

Each precaution in this manual should be followed during servicing. Components identified with the IEC symbol ⚠ in the parts list and the schematic diagram designate components in which safety can be of special significance. When replacing a component identified ⚠, use only the replacement parts designated, or parts with the same ratings of resistance, wattage or voltage that are designated in the parts list in this manual. Leakage-current or resistance measurements must be made to determine that exposed parts are acceptably insulated from the supply circuit before returning the product to the customer.

CAUTION: Regular type resistors and capacitors are not listed. To know those values, refer to the schematic diagram.

CABINET

Ref. No.	Part No.	Description
1	614 244 5235	ASSY,PANEL,FRONT
2	614 240 0623	ASSY,CABINET,TOP
3	614 244 5259	ASSY,PANEL,REAR
4	614 238 9874	ASSY,CABINET,BOTTOM
5	614 244 2609	ASSY,COVER,TAPE A
6	614 247 4044	ASSY,COVER,TAPE B
7	614 241 7881	BUTTON,POWER
8	614 243 9081	ASSY,BUTTON,PRESET
9	614 243 9067	BUTTON,EQ
10	614 243 9050	BUTTON,FUNCTION
11	614 243 8749	ESCUTCHEON,LCD
12	614 243 8992	KNOB,ROTARY,MAIN VOL
13	614 243 9005	KNOB,ROTARY,BALANCE
14	614 243 9012	KNOB,LEVER,EJECT A
15	614 243 9029	KNOB,LEVER,EJECT B
16	614 243 9616	ASSY,BUTTON,REC
17	614 244 2777	ASSY,BUTTON,PLAY
18	614 243 9036	BUTTON,REW/F.FWD
19	614 246 8241	ASSY,ESCUTCHEON,LCD
20	614 243 8954	WINDOW,LED,FUNCTION
21	614 243 8961	WINDOW,LED,BASS
22	⚠ 614 129 1772	FIXER,AC CORD
23	412 003 2804	SPECIAL SCREW,PHONO GND

CHASSIS

Ref. No.	Part No.	Description
31	614 243 8480	ASSY,LID,CASSETTE,TAPE A
32	614 243 8497	ASSY,LID,CASSETTE,TAPE B
33	614 221 8983	LEVER,EJECT L
34	614 221 8990	LEVER,EJECT R
35	614 208 9606	SPRING,TENS,EJECT
36	614 244 8199	GEAR ASSY,CASSETTE DUMPER
37	614 239 0603	MOUNT-M,DUMP GEAR FIX
38	614 239 0689	SPRING WIRE,CASSETTE OPEN
39	614 241 2886	SPRING WIRE,CASSETTE OPEN
40	614 221 8839	BRACKET-E,DECK PCB
41	614 129 5558	FIXER,DECK PCB
42	614 239 0559	BRACKET-M,HEAT SINK
43	614 239 0634	SHIELD,RCA
44	614 129 5534	FIXER,MAIN PCB
45	614 246 2775	INSULATOR,SP SOCKET
	614 129 4971	FIXER,DRESS LEAD

FIXING PARTS

Ref. No.	Part No.	Description
Y01	411 021 3107	SCR S-TPG BIN 2.6X8
Y02	411 021 1806	SCR S-TPG BIN 2.6X10
Y03	411 020 9803	SCR S-TPG BRZ+FLG 3X6
Y04	411 021 6405	SCR S-TPG BIN 3X8
Y05	411 020 9902	SCR S-TPG BRZ+FLG 3X8
Y06	411 021 3503	SCR S-TPG BIN 3X10
Y07	411 021 3701	SCR S-TPG BIN 3X10
Y08	411 020 9407	SCR S-TPG BRZ+FLG 3X14
Y09	411 098 4403	SCR S-TPG BIN 3X25,MECHA
Y10	411 021 9604	SCR S-TPG BIM 4X8,P.T
Y11	411 105 9704	WASHER Z 3X10X1,PHONO GND
Y12	411 008 0402	WASHER OUT TW 3,PHONO GND
Y13	411 021 5705	SCR S-TPG BIN 3X6

ELECTRICAL PARTS

Ref. No.	Part No.	Description
51	⚠ 614 023 3100	POWER CORD,AC-IN
or	⚠ 614 023 3148	POWER CORD,AC-IN
52	⚠ 423 005 6509	FUSE 250V 1.25A,FU999
53	⚠ 614 239 7329	POWER TRANSFORMER
54	⚠ 614 239 6841	HEAT SINK,AF POWER IC
55	⚠ 423 016 8004	FUSE 250V 3.15A,FU701·801
56	614 239 7381	CORD,17P,FRONT-MAIN(FFC)
57	614 234 9328	INSULATOR,PT-PRIMARY PCB
58	614 051 9808	LUG,EARTH
61	614 239 6643	ASSY,CONNECTOR-S,3P, FRONT-PRE
62	614 239 6650	ASSY,CONNECTOR-S,4P, FRONT-SP
63	614 243 1948	ASSY,CONNECTOR-S,8P, MAIN-MECHA.A(CN001)
64	614 243 1924	ASSY,CONNECTOR-S,8P, MAIN-MECHA.B(CN002)
65	614 243 1955	ASSY,CONNECTOR-S,9P, PRE-DECK(CN301)
66	614 243 1931	ASSY,CONNECTOR-S,9P, MAIN-DECK(CN302)
67	614 231 2599	ASSY,CONNECTOR-S,2P, E HEAD(CN341)
68	614 231 2575	ASSY,CONNECTOR-S,3P, P HEAD(CN381)
69	614 231 2582	ASSY,CONNECTOR-S,5P, R/P HEAD(CN382)

PRE-AMPLIFIER P.C.BOARD ASSY

Ref. No.	Part No.	Description
71	614 241 0806	ASSY,PCB,PRE-AMP.
C4516	403 139 9102	MT-POLYEST 0.082U J 63V
C4517	403 065 8200	MT-POLYEST 0.27U J 63V
C4518	403 139 8600	MT-POLYEST 0.033U J 63V
C4519	403 065 8002	MT-PLLYEST 0.1U J 63V
C4572	403 057 1905	POLYESTER 0.1U J 50V
C4573	403 057 1905	POLYESTER 0.1U J 50V
C4574	403 057 1905	POLYESTER 0.1U J 50V
C4575	403 057 1905	POLYESTER 0.1U J 50V
C4578	403 062 6209	POLYESTER 0.056U J 50V
C4616	403 139 9102	MT-POLYEST 0.082U J 63V
C4617	403 065 8200	MT-POLYEST 0.27U J 63V
C4618	403 139 8600	MT-POLYEST 0.033U J 63V
C4619	403 065 8002	MT-PLLYEST 0.1U J 63V
C4672	403 057 1905	POLYESTER 0.1U J 50V
C4673	403 057 1905	POLYESTER 0.1U J 50V
C4674	403 057 1905	POLYESTER 0.1U J 50V
C4675	403 057 1905	POLYESTER 0.1U J 50V
C4678	403 062 6209	POLYESTER 0.056U J 50V
CN301	614 017 2607	PLUG,9P,TO DECK
CN411	614 239 7244	SOCKET,10P,TO MAIN-AMP.
CN412	614 239 7220	SOCKET,8P,TO MAIN-AMP.
CN413	614 239 7213	SOCKET,7P,TO MAIN AMP.
CN414	614 241 9441	SOCKET,6P,TO MAIN-AMP.
CN431	614 221 3360	SOCKET,4P,RCA,HONO & VIDEO

Ref. No.	Part No.	Description
CN432	614 239 5462	SOCKET,1P,RCA,EXT SP
CN441	614 017 2546	PLUG,3P,TO FRONT(VR)
D4190	407 053 6407	ZENER DIODE MTZ5.1C
D4350	407 053 6704	ZENER DIODE MTZ5.6B
D4450	407 053 6704	ZENER DIODE MTZ5.6B
D4500	407 053 6308	ZENER DIODE MTZ5.1B
D4501	407 053 7701	ZENER DIODE MTZ6.8C
D4502	407 053 7701	ZENER DIODE MTZ6.8C
IC701	409 018 4909	IC LA6458S
IC702	409 003 9308	IC BU4051B
IC703	409 018 4909	IC LA6458S
IC704	409 018 4909	IC LA6458S
IC705	409 088 4007	IC LC7522
IC706	409 018 4909	IC LA6458S
IC707	409 114 4803	IC LB1641
IC711	409 018 4909	IC LA6458S
IC802	409 003 9308	IC BU4051B
L4190	614 027 9214	COIL,CHOKE
Q4301	405 105 7204	TR BA1L4Z
or	405 075 8409	TR DTC144TS
Q4302	405 012 2002	TR 2SC1815-GR
or	405 020 7204	TR 2SC945A-K
Q4303	405 105 7204	TR BA1L4Z
or	405 075 8409	TR DTC144TS
Q4304	405 105 7204	TR BA1L4Z
or	405 075 8409	TR DTC144TS
Q4305	405 012 2002	TR 2SC1815-GR
or	405 020 7204	TR 2SC945A-K
Q4306	405 012 2002	TR 2SC1815-GR
or	405 020 7204	TR 2SC945A-K
Q4307	405 012 2002	TR 2SC1815-GR
or	405 020 7204	TR 2SC945A-K
Q4308	405 075 8409	TR DTC144TS
or	405 105 7204	TR BA1L4Z
Q4309	405 075 8409	TR DTC144TS
or	405 105 7204	TR BA1L4Z
Q4504	405 012 2002	TR 2SC1815-GR
or	405 020 7204	TR 2SC945A-K
Q4505	405 012 2002	TR 2SC1815-GR
or	405 020 7204	TR 2SC945A-K
Q4506	405 012 2002	TR 2SC1815-GR
or	405 020 7204	TR 2SC945A-K
Q4507	405 012 2002	TR 2SC1815-GR
or	405 020 7204	TR 2SC945A-K
Q4508	405 012 2002	TR 2SC1815-GR
or	405 020 7204	TR 2SC945A-K
Q4509	405 012 2002	TR 2SC1815-GR
or	405 020 7204	TR 2SC945A-K
Q4510	405 012 2002	TR 2SC1815-GR
or	405 020 7204	TR 2SC945A-K
Q4570	405 012 2002	TR 2SC1815-GR
or	405 020 7204	TR 2SC945A-K
Q4571	405 012 2002	TR 2SC1815-GR
or	405 020 7204	TR 2SC945A-K
Q4604	405 012 2002	TR 2SC1815-GR
or	405 020 7204	TR 2SC945A-K
Q4605	405 012 2002	TR 2SC1815-GR
or	405 020 7204	TR 2SC945A-K
Q4606	405 012 2002	TR 2SC1815-GR
or	405 020 7204	TR 2SC945A-K
Q4607	405 012 2002	TR 2SC1815-GR
or	405 020 7204	TR 2SC945A-K
Q4608	405 012 2002	TR 2SC1815-GR
or	405 020 7204	TR 2SC945A-K
Q4609	405 012 2002	TR 2SC1815-GR
or	405 020 7204	TR 2SC945A-K
Q4610	405 012 2002	TR 2SC1815-GR
or	405 020 7204	TR 2SC945A-K
Q4670	405 012 2002	TR 2SC1815-GR
or	405 020 7204	TR 2SC945A-K
Q4671	405 012 2002	TR 2SC1815-GR
or	405 020 7204	TR 2SC945A-K
R4190	⚠ 402 004 4303	FUSIBLE RES 10 J- 1/4W
RA450	614 218 0464	RESISTOR,100K X8
or	614 209 3696	RESISTOR,100K X8
RA451	614 218 0464	RESISTOR,100K X8
or	614 209 3696	RESISTOR,100K X8
S3101	614 012 4316	SWITCH,BEAT CANCEL
or	614 023 8297	SWITCH,BEAT CANCEL
S4302	614 215 9828	SWITCH,TACT,RESET
VR451	614 239 4755	VR,ROTARY,100K(B),MAIN VOL

MAIN-AMPLIFIER P.C.BOARD ASSY

Ref. No.	Part No.	Description
72	614 245 2738	ASSY,PCB,MAIN-AMP.
C4907	403 200 0502	ELECT 3300U M 50V
C4908	403 200 0502	ELECT 3300U M 50V
C4925	403 200 0205	ELECT 2200U M 35V
C5000	403 135 3302	ELECT 1000U M 6.3V
CN001	614 017 2591	PLUG,8P,TO MECHA. A
CN002	614 228 0911	PLUG,8P,TO MECHA. B
CN302	614 236 4277	PLUG,9P,TO DECK-AMP.
CN321	614 220 2739	PLUG,6P,TO FRONT SW1
CN322	614 017 2577	PLUG,6P,TO FRONT SW2
CN500	614 241 0530	SOCKET,17P,TO FRONT(FFC)
CN802	614 020 1239	SOCKET,4P,TO SP TERMINAL
CN850	614 020 6555	SOCKET,3P,TO REGULATOR IC
or	614 223 9216	SOCKET,3P,TO REGULATOR IC
CN870	614 020 6579	SOCKET,5P,TO P.T SEC
or	614 223 9230	SOCKET,5P,TO P.T SEC
CN871	614 020 1222	SOCKET,3P,TO P.T PRI
CN900	614 239 5455	SOCKET,19P,TO CD/TUNER UNIT
CN911	614 239 7176	PLUG,10P,TO PRE-AMP
CN912	614 239 7152	PLUG,8P,TO PRE-AMP
CN913	614 239 7145	PLUG,7P,TO PRE-AMP
CN914	614 241 9434	PLUG,6P,TO PRE-AMP
D4741	407 053 3208	ZENER DIODE MTZ12B
D4900	⚠ 407 077 7800	DIODE RBV-402LF-A
or	⚠ 407 146 3306	DIODE RBA-402LF-A
D4901	⚠ 407 012 3300	DIODE 1SR35-200A
D4902	⚠ 407 012 3300	DIODE 1SR35-200A
D4903	⚠ 407 012 3300	DIODE 1SR35-200A
D4904	⚠ 407 012 3300	DIODE 1SR35-200A
D4905	407 012 4406	DIODE 1SS133
or	407 007 9904	DIODE GMA01
or	407 012 5809	DIODE 1SS176
D4911	407 012 4406	DIODE 1SS133
or	407 007 9904	DIODE GMA01
or	407 012 5809	DIODE 1SS176
D4912	407 007 9904	DIODE GMA01
or	407 012 4406	DIODE 1SS133
or	407 012 5809	DIODE 1SS176
D4913	407 053 3802	ZENER DIODE MTZ15C
D4950	407 012 4406	DIODE 1SS133
or	407 007 9904	DIODE GMA01
or	407 012 5809	DIODE 1SS176
D4951	407 012 4406	DIODE 1SS133
or	407 007 9904	DIODE GMA01
or	407 012 5809	DIODE 1SS176

Ref. No.	Part No.	Description
D4952	407 012 4406	DIODE 1SS133
or	407 007 9904	DIODE GMA01
or	407 012 5809	DIODE 1SS176
D4953	407 012 4406	DIODE 1SS133
or	407 007 9904	DIODE GMA01
or	407 012 5809	DIODE 1SS176
D5000	407 012 4406	DIODE 1SS133
or	407 007 9904	DIODE GMA01
or	407 012 5809	DIODE 1SS176
D5005	407 012 4406	DIODE 1SS133
or	407 007 9904	DIODE GMA01
or	407 012 5809	DIODE 1SS176
D5006	407 012 4406	DIODE 1SS133
or	407 012 5809	DIODE 1SS176
or	407 007 9904	DIODE GMA01
D5007	407 012 4406	DIODE 1SS133
or	407 012 5809	DIODE 1SS176
or	407 007 9904	DIODE GMA01
D5200	407 053 6704	ZENER DIODE MTZ5.6B
D5201	407 012 4406	DIODE 1SS133
or	407 007 9904	DIODE GMA01
or	407 012 5809	DIODE 1SS176
D5202	407 012 5809	DIODE 1SS176
or	407 007 9904	DIODE GMA01
or	407 012 4406	DIODE 1SS133
D5300	407 053 6704	ZENER DIODE MTZ5.6B
D5301	407 053 6704	ZENER DIODE MTZ5.6B
HS401	⚠ 614 203 7362	HEAT SINK, FOR IC900
HS402	⚠ 614 203 7362	HEAT SINK, FOR IC903
HS403	⚠ 614 121 5884	HEAT SINK, FOR Q4903
HS404	⚠ 614 121 5884	HEAT SINK, FOR Q4904
IC500	410 150 9608	IC UPD75516GF-412-3B9
IC501	409 275 5107	IC BA3826S
IC700	⚠ 409 047 0200	IC STK4132MK2
IC900	⚠ 409 027 1005	IC L780S12
IC901	⚠ 409 169 7804	IC NJM78M05FA
or	⚠ 409 057 6407	IC UPC78M05H
or	⚠ 409 026 8500	IC L78M05
IC903	⚠ 409 027 1005	IC L780S12
Q4720	405 016 2206	TR 2SC2878-A
or	405 016 2305	TR 2SC2878-B
Q4721	405 016 2206	TR 2SC2878-A
or	405 016 2305	TR 2SC2878-B
Q4740	⚠ 405 015 1606	TR 2SC2655-Y
Q4741	405 012 2002	TR 2SC1815-GR
or	405 020 7204	TR 2SC945A-K
Q4742	405 035 1600	TR RN1211
or	405 107 8704	TR BA1A4Z
or	405 000 3400	TR DTC114TS
Q4820	405 016 2206	TR 2SC2878-A
or	405 016 2305	TR 2SC2878-B
Q4821	405 016 2206	TR 2SC2878-A
or	405 016 2305	TR 2SC2878-B
Q4901	405 012 2002	TR 2SC1815-GR
or	405 020 7204	TR 2SC945A-K
Q4902	405 012 2002	TR 2SC1815-GR
or	405 020 7204	TR 2SC945A-K
Q4903	⚠ 405 077 9008	TR TIP29B
Q4904	⚠ 405 078 8109	TR TIP32B
Q4905	405 001 7209	TR 2SA1015-Y
Q4906	405 012 2002	TR 2SC1815-GR
or	405 020 7204	TR 2SC945A-K
Q5001	405 035 1600	TR RN1211
or	405 107 8704	TR BA1A4Z
Q5002	405 035 1600	TR RN1211
or	405 107 8704	TR BA1A4Z
Q5003	405 001 0200	TR RN1202
or	405 078 2909	TR BA1A4M
Q5004	405 001 0200	TR RN1202
or	405 078 2909	TR BA1A4M
Q5005	405 001 0200	TR RN1202
or	405 078 2909	TR BA1A4M
Q5006	405 001 1108	TR RN2202
or	405 078 2305	TR BN1A4M
Q5007	405 001 1108	TR RN2202
or	405 078 2305	TR BN1A4M
Q5008	405 001 1108	TR RN2202
or	405 078 2305	TR BN1A4M
Q5200	405 091 4201	TR BN1L4Z
or	405 075 7907	TR DTA114TS
Q5201	405 057 7604	TR 2SA1175-FF
or	405 002 1107	TR 2SA1048-GR
or	405 002 5402	TR 2SA1175-EF
Q5202	405 001 0200	TR RN1202
or	405 078 2909	TR BA1A4M
or	405 000 3103	TR DTC114ES
R4706	401 008 7204	CARBON 2.2K JB 1/2W
R4741	⚠ 402 023 1703	FUSIBLE RES 100 J- 1/4W
R4806	401 008 7204	CARBON 2.2K JB 1/2W
R4841	⚠ 402 023 1703	FUSIBLE RES 100 J- 1/4W
R4844	⚠ 402 023 1703	FUSIBLE RES 100 J- 1/4W
R4909	⚠ 402 066 3108	FUSIBLE RES 27 JS 1/2W
R4910	⚠ 402 066 3207	FUSIBLE RES 47 JS 1/2W
RA500	614 217 1318	RESISTOR,10K X6
or	614 209 3641	RESISTOR,10K X6
RA501	614 209 3580	RESISTOR,10K X3
or	614 217 1288	RESISTOR,10K X3
RA502	614 217 1318	RESISTOR,10K X6
or	614 209 3641	RESISTOR,10K X6
RA503	614 209 3627	RESISTOR,10K X5
or	614 217 1301	RESISTOR,10K X5
X5000	614 215 5523	RESONATOR,4.19MHHZ,IC500

P.T PRIMARY P.C.BOARD ASSY

Ref. No.	Part No.	Description
73	614 245 2769	ASSY,PCB,P.T-PRI
	⚠ 614 017 8203	TERMINAL BOARD,AC-IN
FCLP5	⚠ 614 208 4540	FUSE HOLDER,FU999
FCLP6	⚠ 614 208 4540	FUSE HOLDER,FU999
L9999	⚠ 614 229 0422	INDUCTOR,FERITE,AC LINE

P.T SECONDARY P.C.BOARD ASSY

Ref. No.	Part No.	Description
74	614 245 2790	ASSY,PCB,P.T-SEC
CN770	614 020 6579	SOCKET,5P,TO MAIN-AMP.
or	614 223 9230	SOCKET,5P,TO MAIN-AMP.
CN771	614 020 1222	SOCKET,3P,TO MAIN-AMP.
ICP51	⚠ 614 205 2921	IC PROTECTOR ICP-N38
ICP52	⚠ 614 205 2921	IC PROTECTOR ICP-N38
R4997	⚠ 402 044 1607	RESISTOR 0.33 J- 1/2W
R4998	⚠ 402 044 1607	RESISTOR 0.33 J- 1/2W
R4999	⚠ 402 045 1309	RESISTOR 0.33 J- 1W

REGULATOR IC P.C.BOARD ASSY

Ref. No.	Part No.	Description
75	614 245 2820	ASSY,PCB,REG.-IC
CN750	614 020 6555	SOCKET,3P,MAIN-AMP.
or	614 223 9216	SOCKET,3P,MAIN-AMP.
IC902	⚠ 409 122 6202	IC NJM7812FA
or	⚠ 409 078 2402	IC L7812ML

Ref. No.	Part No.	Description
or	⚠ 409 168 2107	IC UPC7812HF
or	⚠ 409 001 7603	IC AN7812F

SPEAKER TERMINAL P.C.BOARD ASSY

Ref. No.	Part No.	Description
76	614 245 2851	ASSY,PCB,SP TERMINAL
	614 051 9808	LUG,EARTH
C4170	403 057 0403	POLYESTER 0.01U K 50V
C4171	403 062 5103	POLYESTER 5600P K 50V
C4172	403 062 5103	POLYESTER 5600P K 50V
CN700	614 239 1655	TERMINAL,4P,SPEAKER
CN701	614 017 2553	PLUG,4P,TO FRONT
CN702	614 020 1239	SOCKET,4P,TO MAIN-AMP.
D4750	407 012 4406	DIODE 1SS133
or	407 007 9904	DIODE GMA01
or	407 012 5809	DIODE 1SS176
FCLP1	614 208 4540	FUSE HOLDER,FOR FU701
FCLP2	614 208 4540	FUSE HOLDER,FOR FU701
FCLP3	614 208 4540	FUSE HOLDER,FOR FU801
FCLP4	614 208 4540	FUSE HOLDER,FOR FU801
R4750	401 010 5601	CARBON 5.6 JB 1/2W
R4751	401 009 5506	CARBON 330 JB 1/2W
R4850	401 010 5601	CARBON 5.6 JB 1/2W
R4851	401 009 5506	CARBON 330 JB 1/2W
RY700	614 242 7767	RELAY,SPEAKER

FRONT P.C.BOARD ASSY

Ref. No.	Part No.	Description
77	614 247 3924	ASSY,PCB,FRONT
	614 241 9151	REFLECTOR,LCD
	614 238 8037	SHEET,LCD
CN551	614 241 0752	SOCKET,17P,TO MAIN-AMP.
CN553	614 017 3833	PLUG,4P,TO SP TERMINAL
CN554	614 239 6193	JACK,PHONE
CN555	614 017 3826	PLUG,3P,TO PRE-AMP.
D5501	408 017 5801	LED SLZ-981C-15-T2,STAND BY
D5502	407 007 9904	DIODE GMA01
or	407 012 4406	DIODE 1SS133
D5503	407 007 9904	DIODE GMA01
or	407 012 4406	DIODE 1SS133
D5511	408 016 1002	LED SLZ-181C-15-T2,VIDEO
D5512	408 016 1002	LED SLZ-181C-15-T2,PHONO
D5513	408 016 1002	LED SLZ-181C-15-T2,TUNER
D5514	408 016 1002	LED SLZ-181C-15-T2,TAPE
D5515	408 016 1002	LED SLZ-181C-15-T2,CD
D5516	408 016 1101	LED SLZ-381C-15-T2,D'BASS
IC551	409 088 6209	IC LC7582
LCD51	614 238 3254	LCD(LIQUID CRYSTAL DISPLAY)
Q5501	405 001 0200	TR RN1202
or	405 078 2909	TR BA1A4M
or	405 000 3103	TR DTC114ES
Q5502	405 012 2002	TR 2SC1815-GR
or	405 020 7204	TR 2SC945A-K
Q5503	405 105 7204	TR BA1L4Z
or	405 075 8409	TR DTC144TS
S5501	614 220 5648	SWITCH,TACT,POWER
S5502	614 220 5648	SWITCH,TACT,FUNCTION
S5514	614 220 5648	SWITCH,TACT,EQ-
S5515	614 220 5648	SWITCH,TACT,BASS EXPANDER
S5516	614 220 5648	SWITCH,TACT,DISPLAY
S5517	614 220 5648	SWITCH,TACT,FREQ/MEMO
S5518	614 220 5648	SWITCH,TACT,PRESET
S5519	614 220 5648	SWITCH,TACT,EQ+
VR551	614 239 7336	VR,ROTARY,BALANCE,100K(W)

FRONT SWITCH 1 P.C.BOARD ASSY

Ref. No.	Part No.	Description
78	614 245 2950	ASSY,PCB,FRONT SW 1
CN322	614 243 0903	ASSY,CONNECTOR-S,6P, TO MAIN-AMP
D3203	408 013 2903	LED SLZ-181C-09-A-T1,REC
or	408 013 3009	LED SLZ-181C-09-B-T1,REC
D3204	408 008 4806	LED SLP-381C-51-AB,TAPE A
D3205	407 109 4203	LED SLP-181C-51-A,TAPE B
or	407 109 4104	LED SLP-181C-51-B,TAPE B
Q3201	405 000 0508	TR DTA114ES
or	405 001 1108	TR RN2202
or	405 078 2305	TR BN1A4M
Q3202	405 000 0508	TR DTA114ES
or	405 001 1108	TR RN2202
or	405 078 2305	TR BN1A4M
S3206	614 240 4539	SWITCH,TACT,A/B
S3207	614 220 5631	SWITCH,TACT,DIR
S3208	614 220 5631	SWITCH,TACT,DOLBY
S3209	614 220 5631	SWITCH,TACT,DUB
S3210	614 220 5631	SWITCH,TACT,REC MUTE
S3211	614 240 4539	SWITCH,TACT,REC

FRONT SWITCH 2 P.C.BOARD ASSY

Ref. No.	Part No.	Description
79	614 247 8035	ASSY,PCB,FRONT SW2
CN321	614 243 0897	ASSY,CONNECTOR-S,6P, TO MAIN-AMP.
D3201	408 013 3207	LED SLZ-381C-09-A-T1,FOW
or	408 013 3306	LED SLZ-381C-09-B-T1,FOW
D3202	408 013 3207	LED SLZ-381C-09-A-T1,REV
or	408 013 3306	LED SLZ-381C-09-B-T1,REV
S3201	614 220 5631	SWITCH,TACT,STOP
S3202	614 220 5631	SWITCH,TACT,FOW
S3203	614 220 5631	SWITCH,TACT,REV
S3204	614 220 5631	SWITCH,TACT,F.F
S3205	614 220 5631	SWITCH,TACT,REW

LED (LCD BACK LIGHT) P.C.BOARD ASSY

Ref. No.	Part No.	Description
80	614 239 9095	ASSY,PCB,LED
CN562	614 242 9488	ASSY,CONNECTOR-S,2P,TO FRONT
D5551	407 153 9506	LED CL-170G-CD-AL
or	407 153 9605	LED CL-170G-CD-BL
or	407 153 9704	LED CL-170G-CD-CL
D5552	407 153 9506	LED CL-170G-CD-AL
or	407 153 9605	LED CL-170G-CD-BL
or	407 153 9704	LED CL-170G-CD-CL
D5553	407 153 9803	LED CL-170G-CD-AH
or	407 153 9902	LED CL-170G-CD-BH
or	407 154 0007	LED CL-170G-CD-CH
D5554	407 153 9803	LED CL-170G-CD-AH
or	407 153 9902	LED CL-170G-CD-BH
or	407 154 0007	LED CL-170G-CD-CH
D5555	407 153 9803	LED CL-170G-CD-AH
or	407 153 9902	LED CL-170G-CD-BH
or	407 154 0007	LED CL-170G-CD-CH
D5556	407 153 9506	LED CL-170G-CD-AL
or	407 153 9605	LED CL-170G-CD-BL
or	407 153 9704	LED CL-170G-CD-CL
D5557	407 153 9506	LED CL-170G-CD-AL
or	407 153 9605	LED CL-170G-CD-BL
or	407 153 9704	LED CL-170G-CD-CL
D5558	407 153 9506	LED CL-170G-CD-AL
or	407 153 9605	LED CL-170G-CD-BL

Ref. No.	Part No.	Description
or	407 153 9704	LED CL-170G-CD-CL
D5559	407 153 9803	LED CL-170G-CD-AH
or	407 153 9902	LED CL-170G-CD-BH
or	407 154 0007	LED CL-170G-CD-CH
D5560	407 153 9506	LED CL-170G-CD-AL
or	407 153 9605	LED CL-170G-CD-BL
or	407 153 9704	LED CL-170G-CD-CL
D5561	407 153 9803	LED CL-170G-CD-AH
or	407 153 9902	LED CL-170G-CD-BH
or	407 154 0007	LED CL-170G-CD-CH
D5562	407 153 9506	LED CL-170G-CD-AL
or	407 153 9605	LED CL-170G-CD-BL
or	407 153 9704	LED CL-170G-CD-CL
D5563	407 153 9803	LED CL-170G-CD-AH
or	407 153 9902	LED CL-170G-CD-BH
or	407 154 0007	LED CL-170G-CD-CH
D5564	407 153 9803	LED CL-170G-CD-AH
or	407 153 9902	LED CL-170G-CD-BH
or	407 154 0007	LED CL-170G-CD-CH
D5565	407 153 9506	LED CL-170G-CD-AL
or	407 153 9605	LED CL-170G-CD-BL
or	407 153 9704	LED CL-170G-CD-CL
D5566	407 153 9803	LED CL-170G-CD-AH
or	407 153 9902	LED CL-170G-CD-BH
or	407 154 0007	LED CL-170G-CD-CH
D5567	407 153 9803	LED CL-170G-CD-AH
or	407 153 9902	LED CL-170G-CD-BH
or	407 154 0007	LED CL-170G-CD-CH
D5568	407 153 9506	LED CL-170G-CD-AL
or	407 153 9605	LED CL-170G-CD-BL
or	407 153 9704	LED CL-170G-CD-CL
D5569	407 153 9803	LED CL-170G-CD-AH
or	407 153 9902	LED CL-170G-CD-BH
or	407 154 0007	LED CL-170G-CD-CH
D5570	407 153 9506	LED CL-170G-CD-AL
or	407 153 9605	LED CL-170G-CD-BL
or	407 153 9704	LED CL-170G-CD-CL

TAPE DECK AMPLIFIER P.C.BOARD ASSY

Ref. No.	Part No.	Description
81	614 243 1573	ASSY,PCB,DECK-AMP
	614 117 1098	SHIELD PLATE
C3303	403 058 2406	POLYESTER 0.015U J 50V
C3304	403 058 1102	POLYESTER 1500P K 50V
CN301	614 017 2607	PLUG,9P,TO PRE-AMP.
CN302	614 239 9378	PLUG,9P,TO MAIN-AMP.
CN303	614 016 4084	PLUG,2P,HIGH SPEED
CN331	614 017 2539	PLUG,2P,E HEAD
CN371	614 017 2553	PLUG,4P,P HEAD
CN372	614 017 2560	PLUG,5P,R/P HEAD
CN373	614 035 5949	SOCKET,3P,TAPE OUT
D3101	407 007 9904	DIODE GMA01
or	407 012 4406	DIODE 1SS133
D3102	407 007 9904	DIODE GMA01
or	407 012 4406	DIODE 1SS133
D3103	407 007 9904	DIODE GMA01
or	407 012 4406	DIODE 1SS133
D3104	407 007 9904	DIODE GMA01
or	407 012 4406	DIODE 1SS133
D3105	407 005 4505	DIODE DS442X
or	407 013 7109	DIODE 1S2473
D3106	407 007 9904	DIODE GMA01
or	407 012 4406	DIODE 1SS133
HS301	614 211 3592	HEAT SINK,BIAS LEAK
IC351	409 206 8207	IC CXA1331S

Ref. No.	Part No.	Description
IC370	409 121 8702	IC LA3246
IC371	409 207 1900	IC MLC4066B
or	409 003 9506	IC BU4066B
or	409 051 3501	IC TC4066BP
or	409 059 2605	IC UPD4066BC
IC374	409 214 1900	IC CXA1298AP
IC375	409 145 8405	IC UPC1330HA
L3300	614 221 8280	TRANS,OSC
L3700	614 028 4379	FILTER,1000UH
L3730	614 029 3807	MX COIL,85KHZ
L3731	614 210 3685	INDUCTOR,FERITE,3.3MH
L3750	614 029 3142	MX COIL,85KHZ
L3800	614 028 4379	FILTER,1000UH
L3830	614 029 3807	MX COIL,85KHZ
L3831	614 210 3685	INDUCTOR,FERITE,3.3MH
L3850	614 029 3142	MX COIL,1000UH
Q3101	405 000 6104	TR DTC144ES
or	405 078 3005	TR BA1L4M
or	405 103 9606	TR AA1L4M
or	405 001 0408	TR RN1204
Q3102	405 000 2205	TR DTA144ES
or	405 078 2107	TR BN1L4M
or	405 103 9705	TR AN1L4M
or	405 001 1306	TR RN2204
Q3103	405 000 6104	TR DTC144ES
or	405 078 3005	TR BA1L4M
or	405 103 9606	TR AA1L4M
or	405 001 0408	TR RN1204
Q3104	405 075 8409	TR DTC144TS
or	405 105 7204	TR BA1L4Z
Q3105	405 000 6104	TR DTC144ES
or	405 078 3005	TR BA1L4M
or	405 103 9606	TR AA1L4M
or	405 001 0408	TR RN1204
Q3106	405 000 6104	TR DTC144ES
or	405 078 3005	TR BA1L4M
or	405 103 9606	TR AA1L4M
or	405 001 0408	TR RN1204
Q3107	405 000 2205	TR DTA144ES
or	405 078 2107	TR BN1L4M
or	405 103 9705	TR AN1L4M
or	405 001 1306	TR RN2204
Q3108	405 000 6104	TR DTC144ES
or	405 078 3005	TR BA1L4M
or	405 103 9606	TR AA1L4M
or	405 001 0408	TR RN1204
Q3109	405 075 8409	TR DTC144TS
or	405 105 7204	TR BA1L4Z
Q3160	405 000 6104	TR DTC144ES
or	405 078 3005	TR BA1L4M
or	405 103 9606	TR AA1L4M
or	405 001 0408	TR RN1204
Q3161	405 000 2205	TR DTA144ES
or	405 078 2107	TR BN1L4M
or	405 103 9705	TR AN1L4M
or	405 001 1306	TR RN2204
Q3300	405 012 2002	TR 2SC1815-GR
or	405 020 7204	TR 2SC945A-K
Q3301	405 011 1907	TR 2SC1627-Y
Q3302	405 001 7001	TR 2SA1015-GR
or	405 005 2002	TR 2SA733-P
Q3303	405 012 2002	TR 2SC1815-GR
or	405 020 7204	TR 2SC945A-K
or	405 011 8609	TR 2SC1740S-S
Q3730	405 033 6805	TR 2SD1468S-S
Q3830	405 033 6805	TR 2SD1468S-S

Ref. No.	Part No.	Description
SVR30	614 003 6190	SEMI-FIXED V.R,20K(B)
SVR31	614 003 6190	SEMI-FIXED V.R,20K(B)
SVR32	614 003 6190	SEMI-FIXED V.R,20K(B)
SVR33	614 003 6190	SEMI-FIXED V.R,20K(B)
SVR34	614 003 6183	SEMI-FIXED V.R,10K(B)
SVR35	614 003 6183	SEMI-FIXED V.R,10K(B)
SVR36	614 003 6213	SEMI-FIXED V.R,50K(B)
SVR37	614 003 6213	SEMI-FIXED V.R,50K(B)

PARTS LIST

TAPE DECK MECHANISM (TM-SF3J/SP)

Ref. No.	Part No.	Description
TM01	614 219 9657	ASSY,CHASSIS,TAPE DECK
TM02	614 195 9139	SPRING PLATE,CASETTE PRES
TM03	614 219 9671	ASSY,FLYWHEEL,REV,D2.0
TM04	614 219 9688	ASSY,FLYWHEEL,NOR,D2.2
TM05	412 034 4709	SPECIAL WASHER,REV FW FIX
TM06	412 014 3005	SPECIAL WASHER,NOR FW FIX
TM07	412 029 8200	SPECIAL WASHER,REV OIL PRF
TM08	412 012 7005	SPECIAL WASHER,NOR OIL PRF
TM09	614 219 9596	ASSY,COMMUTATE MOTOR
TM10	614 223 8677	BRACKET-E,MOTOR
TM11	614 219 9954	BELT,SQUARE,A-MECHA DRIVE
TM12	614 219 9961	BELT,SQUARE,B-MECHA DRIVE
TM13	614 195 8644	PULLEY,BELT DUMMY
TM14	412 022 0607	SPECIAL WASHER,D.PULLEY
TM15	614 220 0001	LEVER,PLAY GEAR
TM16	614 220 1657	ASSY,GEAR,PLAY CLUTCH
TM17	614 220 0261	PIPE,PLAY SLIP FIX
TM18	614 224 5293	CUSHION,BELT TUTCH(B)
TM19	614 224 5309	CUSHION,BELT TUTCH(A)
TM20	614 236 5397	SPRING,TENS,PLAY LEVER RSET
TM21	614 219 9817	GEAR,RELAY FIXED
TM22	614 220 0261	PIPE,GEAR FIX
TM23	614 220 1664	ASSY,GEAR,TAKE UP MOVE
TM24	614 220 0025	LEVER,TAKE UP MOVE B
TM25	614 220 1268	SPRING,WIRE,B MECHA REEL CHANGE CLIC
TM26	614 219 9848	GEAR,REEL RELAY
TM27	614 219 9831	GEAR,REEL
TM28	614 219 9886	REEL,RIGHT
TM29	614 219 9893	REEL,LEFT
TM30	614 220 1251	SPRING,COMP,BACK TENSION L
TM31	614 219 9695	ASSY,LEVER,PINCH,LEFT
TM32	614 219 9701	ASSY,LEVER,PINCH,LIGHT
TM33	614 229 7520	SPRING,WIRE,PINCH LEFT
TM34	614 220 1275	SPRING,WIRE,PINCH RIGHT
TM35	614 220 0070	LEVER,BRAKE R
TM36	614 220 0087	LEVER,BRAKE L
TM37	614 220 0162	SLIDE,DOOR LOCK A
TM38	614 220 0179	SLIDE,DOOR LOCK B
TM39	614 220 0247	SLIDE,EJECT RELAY A
TM40	614 220 0254	SLIDE,EJECT RELAY B
TM41	614 220 1190	SPRING,TENS,EJECT RELAY
TM42	614 220 0339	MAGNETIC COIL,SOLENOID
TM43	614 220 1626	ASSY,PCB,MECHA
TM44	614 219 9770	SHIELD,HEAD PCB
TM45	614 222 8968	PCB,P LEAD RELAY
TM46	614 222 8975	PCB,R/P LEAD RELAY
TM47	614 220 0148	LEVER,D.SLIDE LOCK
TM48	614 220 1312	SPRING,WIRE,LOCK LEVER
TM49	614 232 5414	LEVER,HEAD SLIDE UP A
TM50	614 220 0131	LEVER,HEAD SLIDE UP B
TM51	614 220 1688	ASSY,SLIDE,HEAD
TM52	614 220 1329	SPRING,WIRE,HEAD SLIDE
TM53	614 220 1183	SPRING,TENS,HEAD SILED CONT
TM54	614 219 9763	GUIDE,TAPE
TM55	614 220 1633	ASSY,BRACKET-E,HEAD LOCATE
TM56	614 220 0292	HEAD,REC/PLAY
TM57	614 220 0308	HEAD,PLAY
TM58	614 220 4900	GEAR,HEAD ROTARY
TM59	412 012 7609	SPECIAL WASHER,HEAD THRUST
TM60	614 220 0063	LEVER,SECTOR
TM61	614 220 1336	SPRING,WIRE,HEAD CLIC
TM62	614 226 5543	SPRING,COMP,AZIMUTH COIL
TM63	412 031 2005	SPECIAL SCREW,AZIMUTH BISS
TM64	614 221 8235	SPRING,WIRE,HEAD SLIDE GND
TM65	614 219 9992	LEVER,R/F A
TM66	614 220 0032	LEVER,R/F B
TM67	614 219 9855	GEAR,R/F MOVE
TM68	614 220 0261	PIPE,R/F MOVE GEAR FIX
TM69	614 219 9879	GEAR,D.CAM
TM70	614 220 0049	LEVER,MAIN TRIGGER
TM71	614 220 0056	LEVER,SUB TRIGGER
TM72	614 223 8745	SLIDE,DRIVE
TM73	614 220 1299	SPRING,WIRE,D.SLIDE RESET
TM74	614 220 0186	SLIDE,A/B MECHA CHANGE
TM75	614 229 7506	SPRING,TENS,CHANGE SLIDE
TM76	614 229 7513	SPRING,TENS,TRIGGER INNER FORCE
TM77	614 219 9718	ASSY,SLIDE,HEAD CHANGE
TM78	614 220 1305	SPRING,WIRE,CHANGE SLIDE
TM79	614 220 0209	SLIDE,REEL CHANGE NO.1
TM80	614 219 9725	ASSY,SLIDE,REEL CHANGE NO.2
TM81	614 220 0346	SWITCH,LEAF,PACK1,S003
or	614 220 0346	SWITCH,LEAF,PACK2,S004
or	614 220 0346	SWITCH,LEAF,CROM1,S005
or	614 220 0346	SWITCH,LEAF,CROM2,S006
or	614 220 0346	SWITCH,LEAF,URFWD,S007
or	614 220 0346	SWITCH,LEAF,URREV,S008
TM82	614 225 6916	CUSHION,RUBBER,SILEN
TM83	614 226 6854	CUSHION,RF LEVER TOUTCH
TM84	614 229 1313	CUSHION,RUBBER,DRIVE SLIDE WIRE STOPPER
TM85	614 228 5053	CUSHION,RUBBER,H.S. STOPPER
TM86	614 228 2311	CUSHION,RF LEVER,SILEN

FIXING PARTS FOR TAPE DECK MECHANISM

Ref. No.	Part No.	Description
TY01	411 102 6300	SCR PAN-FLG 2.6X2.8, MOTOR
TY02	411 021 6405	SCR S-TPG BIN 3X8, B-MOTOR
TY03	411 044 7205	SCR PAN+SW 2X4, SOLENOID
TY04	411 021 0809	SCR S-TPG BIN 2X6
TY05	411 022 7807	SCR S-TPG PAN 2X6,TAPE GUID
TY06	411 124 9204	SCR PAN PCS 1.6X6, HEAD FIX
TY07	411 018 6401	SCR PAN PCS 2X2, REEL CH SLIDE NO.2

TAPE DECK MECHANISM P.C.BOARD ASSY

Ref. No.	Part No.	Description
TM43	614 220 1626	ASSY,PCB,MECHANISM
CN001	614 017 3871	PLUG,8P,CN001,TAPE A
CN002	614 235 3646	PLUG,8P,CN002,TAPE B
CN003	614 035 4935	SOCKET,4P,CN003,TO MOTOR
D001	407 004 9105	DIODE DSF10C
or	407 012 3300	DIODE 1SR35-200A
D002	407 007 9904	DIODE GMA01
or	407 012 4406	DIODE 1SS133
D003	407 051 6706	ZENER DIODE GZS5.1Y
or	407 053 6308	ZENER DIODE MTZ5.1B
PH001	407 131 9900	PHOTO COUPLE SPI-335-34-C
PH002	407 131 9900	PHOTO COUPLE SPI-335-34-C
ICP01	614 205 2884	IC PROTECTOR ICP-N10
Q001	⚠ 405 099 0908	TR 2SB621-S
Q002	405 002 1107	TR 2SA1048-GR
or	405 006 1905	TR 2SA933S-S
Q003	⚠ 405 099 0908	TR 2SB621-S
S001	614 224 2575	SWITCH,LEVER,PLAY
S002	614 224 2575	SWITCH,LEVER,STOP
SV001	614 003 6190	SEMI-FIXED V.R,20K(B)

EXPLODED VIEW (TAPE DECK MECHANISM)

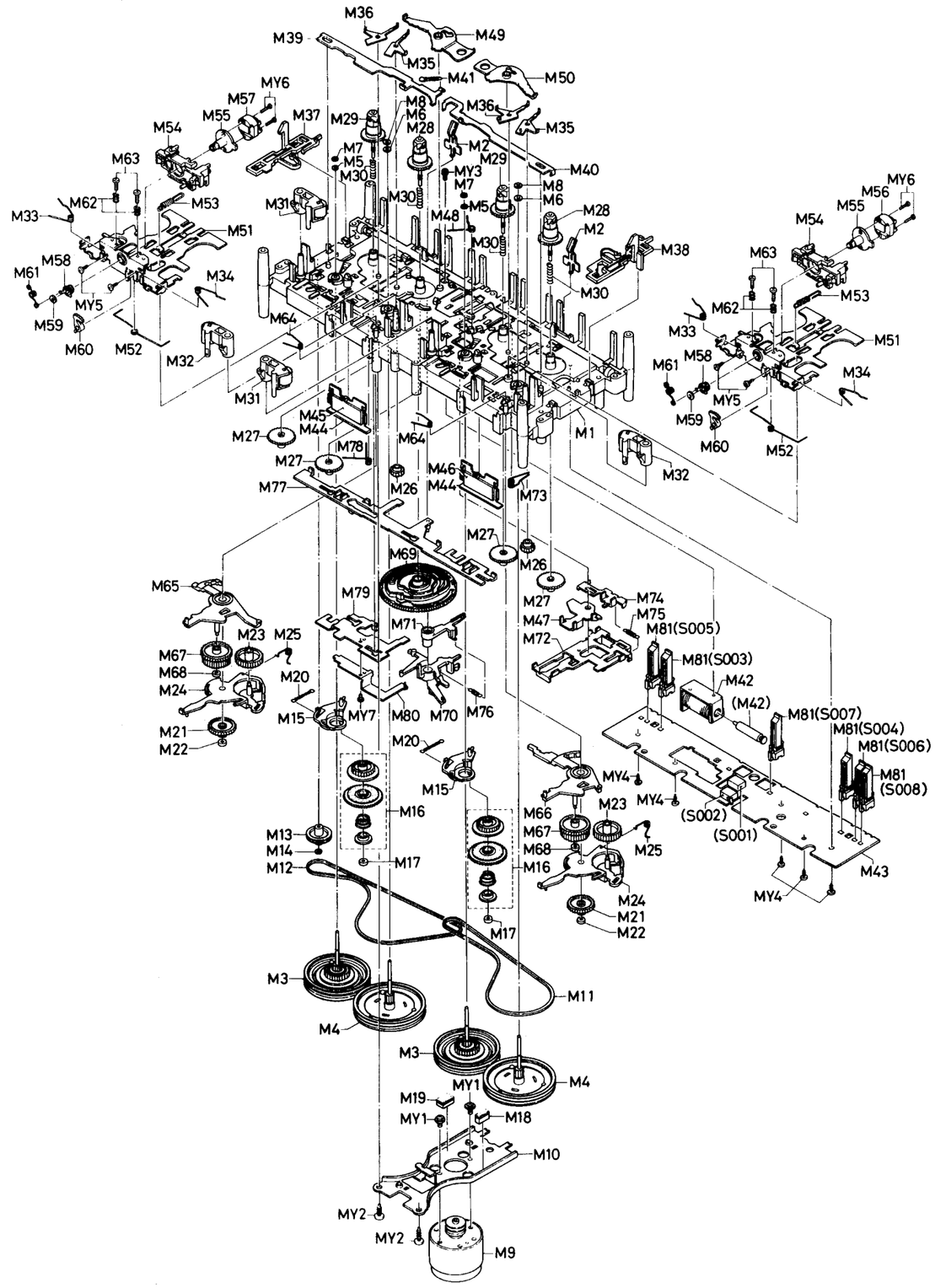

IC BLOCK DIAGRAM (TAPE DECK)

IC351 CXA1331S (Dolby-B / C Noise Reduction System)

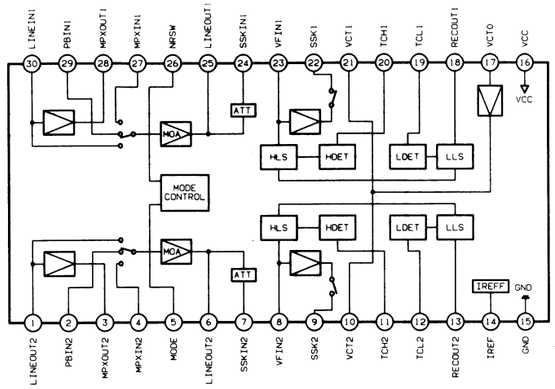

IC370 LA3246 (Pre & Mixing Amplifier with Electrical Switch)

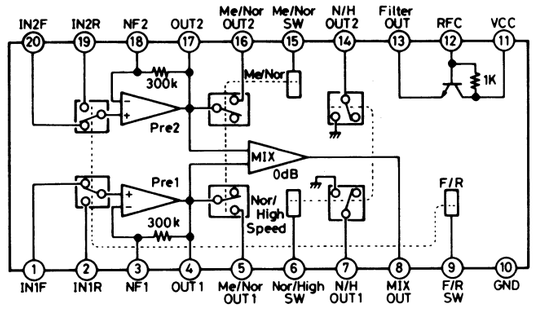

IC374 CXA1298AP (Equalizer Amplifier for Record)

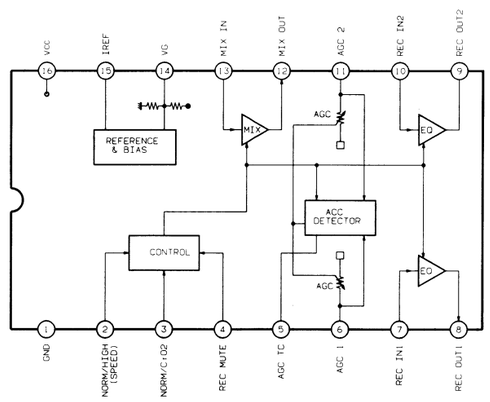

IC371 MLC4066B (Quad Electronic Switch)

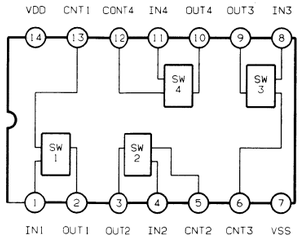

LOGIC DIAGRAM AND TRUTH TABLE

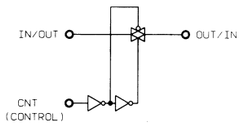

CONTROL	SWITCH
0=VSS	OFF
1=VDD	ON

IC375 µPC1330H (2-ch Head Select Switch)

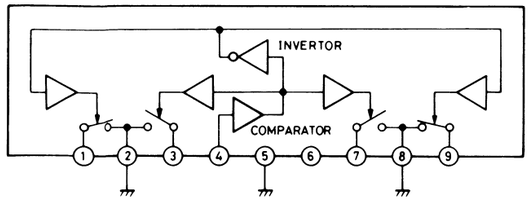

IC BLOCK DIAGRAM (AMPLIFIER)

IC500 µPD75516GF-412-3B9 (Micro Processor)

PIN No.	SIGNAL NAME	I/O	DESCRIPTION	ACTIV	P OFF
1	AN0	I	AD Key Input	---	---
2	AVref	I	Reference Voltage of AD	---	---
3	VDD	I	+5V	---	---
4	VDD(VPP)	I	Connect VDD for PROM	---	---
5	PULL UP 1	O	Set Pull up Signal of AVref Backup Time : LOW	H	H
6	L/R	O	L/R Selection Control for BA3826S	L	L
7	BAND RESET	O	Reset Control for BA3826S	H	L
8	BAND A	I/O	Band Pass A Control of BA3826S	L	L
9	BAND B	I/O	Band Pass B Control of BA3826S	L	L
10	BAND C	I/O	Band Pass C Control of BA3826S	L	L
11	BASS	O	BASS Xpander Control Signal (LED)	L	H
12	DO SURR ON/OFF	O	Dolby Surround Control Signal (LED)	L	H
13	REAR VOL UP	O	Rear Volume Up Signal	H	L
14	REAR VOL DOWN	O	Rear Volume Down Signal	H	L
15	CK7522	O	Equalizer Clock of LC7522	H	L
16	DI7522	O	Data In from LC7522	H	L
17	NC	I	Not Used (VSS)	---	---
18	DA7522	O	Data Signal to LC7522	H	L
19	CK7522	O	Clock Signal to LC7522	H	L
20	NC		Not Used (VSS)	---	---
21	CE7522	O	CE(Chip Enable) of LC7522	H	L
22	FUNC C	O	C Control Signal of Function IC BU4051	H	L
23	FUNC B	O	B Control Signal of Function IC BU4051	H	L
24	FUNC A	O	A Control Signal of Function IC BU4051	H	L
25	DO ON/OFF	O	Dolby ON/OFF Control Signal H : OFF L : ON	H	L
26	DO B/C	O	Dolby B/C Control Signal H : B L : C	H	L
27	SPEED	O	High Speed Signal for Motor H : HIGH	H	L
28	PLUNGER	O	Plunger ON Signal	H	L
29	KARAOKE	I	Not Used (VSS)	---	---
30	AMSS	I	Not Used (VSS)	---	---
31	PACK A	I	Pack A Detection Signal	L : ON	
32	STOP SW	I	Stop Switch Detection Signal	L : ON	
33	VSS	---	Ground	---	---
34	G REV	I	Anti Record Detection Signal for Reverse Direction	L : ON	
35	G FWD	I	Anti Record Detection Signal for Forward Direction	L : ON	
36	PACK B	I	Pack B Detection Signal	L : ON	
37	PLAY SW	I	Play Switch Detection Signal	L : ON	
38	PULL UP 2	O	Set Pull up Signal of AVref	H	L
39	MOTOR	O	Motor ON Signal	H	L
40	SP RELAY	O	Speaker Relay ON Signal	H	L
41	-20dB MUTE	O	-20dB Muting Signal	H	L
42	-∞ MUTE	O	-∞ Muting Signal	H	L
43	POWER ON	O	Power ON Signal	H	L
44	VOL UP	O	Volume Up Signal	H	L
45	VOL DOWN	O	Volume Down Signal	H	L
46	REEL B	I	Reel B Rotate Detection Signal (Edge)		
47	REEL A	I	Reel A Rotate Detection Signal (Edge)		
48	AMSS	I	Input of Music Brank Brank : L		
49	IR	I	Infrared Ray Receiving (Remocon) Signal		
50	CT DATA	I	Micon Data from CT Unit		
51	NC		Not Used (VSS)	---	---
52	CT CLK	I	Clock from CT Unit		
53	P DOWN	I	AC ON/OFF Detection Signal H : ON		
54	VSS	---	Ground		
55	NC	I	Not Used (VSS)		
56	XT2	O	Not Used (VSS)		
57	IC	---	Ground		
58	X1	I	X'tal In (4.19 MHz)		
59	X2	O	X'tal Out (4.19 MHz)		
60	RESET	I	Reset Signal	L	
61	BUSY	O	Busy Signal	H	L
62	OSC	O	OSC Signal	H : REC	L
63	REV IND	O	Reverse Indicator (LED) Signal	L	H
64	1/2 IND	O	Deck A/B Selection Signal	L : B	L

ACTIV : Active Level P OFF : Power Off Time Level

IC BLOCK DIAGRAM (AMPLIFIER)

PIN No.	SIGNAL NAME	I/O	DESCRIPTION	ACTIV	P OFF
65	FOR IND	O	Forward Indicator (LED) Signal	L	H
66	DOLBY R/P	O	Dolby Rec/Play Control Signal	H : REC	L
67	C STOP	O	CD Stop Signal	L	H
68	DUB IN/OUT	O	Dubbing IN/OUT Selection Signal	L	H
69	P MUTE	O	Play Muting Signal	H	H
70	R MUTE	O	Record Muting Signal	H	H
71	REC IND	O	Record Indicator (LED) Signal	L	H
72	DISCO PARTY	O	Not Used (VSS)		
73	A-VSS		AD Ground	---	---
74	PHONO OR VIDEO	I	Not Used (VSS)		
75	MOTOR OR ELECT	I	Not Used (VDD)		
76	REMOCON KEY	I	Not Used (VDD)		
77	NC	I	Not Used (VSS)		
78	BAND LEVEL IN	I	Band Pass VO-IN from BA3826S		
79	VOL LEVEL DC IN	I	Volume Level DC OUT		
80	AN1	I	AD Key Input		

ACTIV : Active Level P OFF : Power Off Time Level

IC501 BA3826S (Band Pass Filter for Spectrum Analyzer)

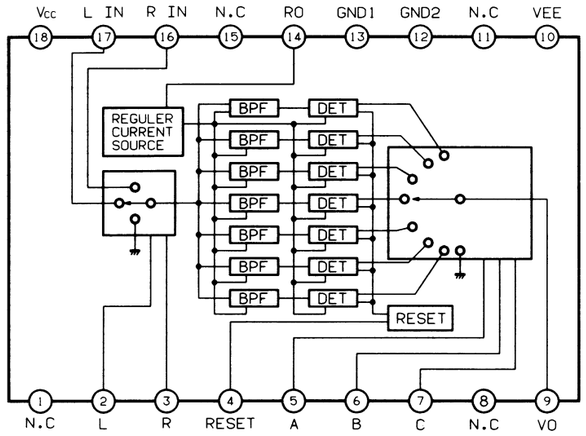

IC551 LC7582 (LCD Driver)

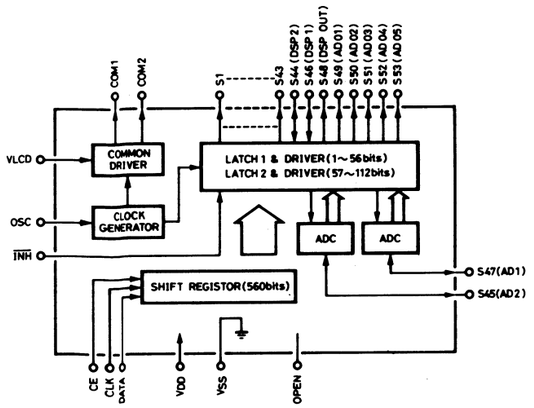

IC700 STK4162MKII (AF Power Amplifier)

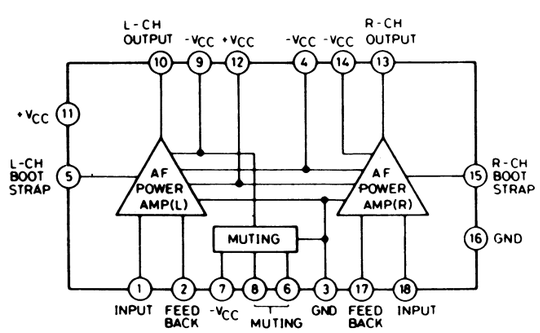

IC BLOCK DIAGRAM (AMPLIFIER)

IC702 · 802 BU4051B (3-Input 8-Channel Multiplexer / De-Multiplexer)

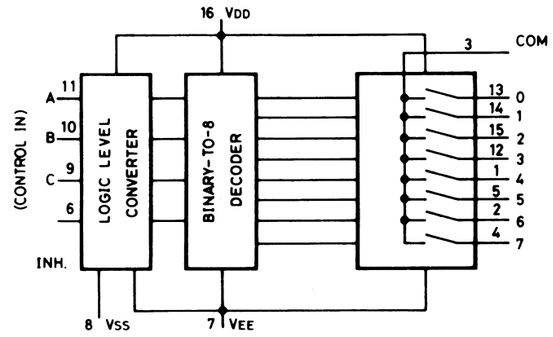

TRUTH TABLE

CONTROL INPUTS				{ON} CHANNEL
INHIBIT	C	B	A	4051
L	L	L	L	0
L	L	L	H	1
L	L	H	L	2
L	L	H	H	3
L	H	L	L	4
L	H	L	H	5
L	H	H	L	6
L	H	H	H	7
H	X	X	X	NONE

X : DON'T CARE

IC701 · 703 · 704 · 706 · 711 LA6458S (Dual Operational Amplifier)

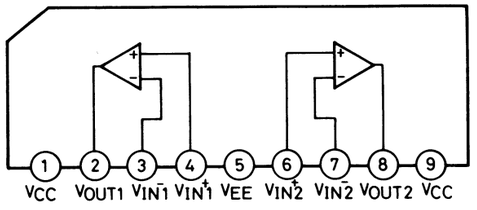

IC705 LC7522 (7-Segment Electronic Variable Resistor)

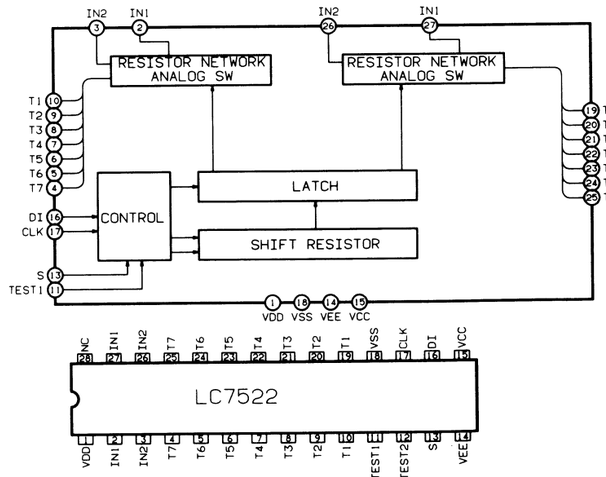

IC707 LB1641 (Volume Motor Driver)

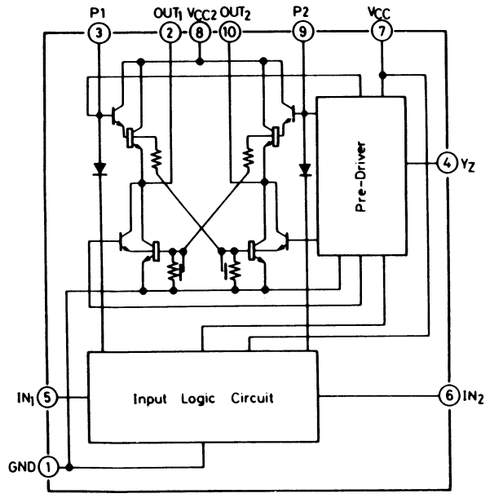

Input		Output		Action
IN_1	IN_2	OUT_1	OUT_2	
0	0	0	0	Brake
1	0	1	0	Normal(Reverse)Rotary
0	1	0	1	Reverse(Normal)Rotary
1	1	0	0	Brake

IC BLOCK DIAGRAM (AMPLIFIER)

IC900 · 903 L78OS12 (5-Terminal Voltage Regulator)

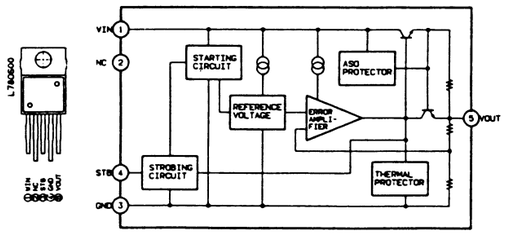

IC901 L78M05 (3-Terminal Voltage Regulator)

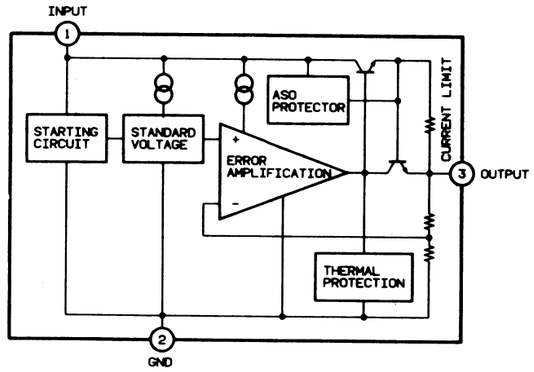

IC902 L7812ML (3-Terminal Voltage Regulator)

LCD (SPECTRUM ANALYZER)

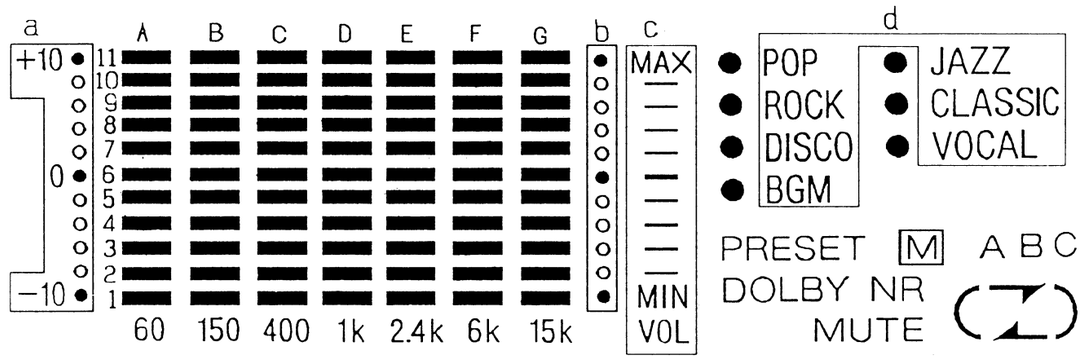

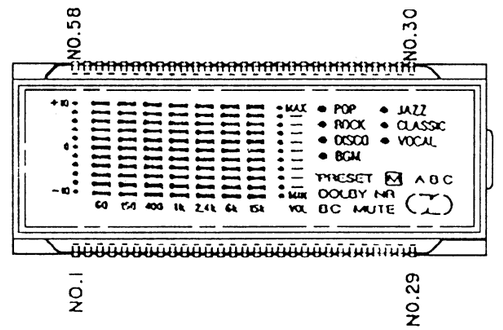

NO.	COM. 1	COM. 2
1		a
2	A5	B5
3	A4	B4
4	A3	B3
5	A2	B2
6	A1	B1
7		60 · 150
8	C5	D5
9	C4	D4
10	C3	D3
11	C2	D2
12		400 · 1K
13	C1	D1
14	E5	F5
15	E4	F4

NO.	COM. 1	COM. 2
16	E3	F3
17		2.4K · 6K
18	E2	F2
19	E1	F1
20	G4	
21	G3	
22	G1	15K
23	G2	c
24		b
25	G5	DOLBY NR
26	G6	PRESET
27	(	MUTE
28	→	←
29	M	)
30	A	● (JAZZ)

NO.	COM. 1	COM. 2
31	B	● (CLAS)
32	C	● (VOCA)
33		● (KARA)
34	G7	d
35	G8	● (BGM)
36	G9	● (DISC)
37	G10	● (ROCK)
38	G11	● (POP)
39	E8	F8
40	E9	F9
41	E10	F10
42	E11	F11
43	E7	F7
44	E6	F6
45	C9	D9

NO.	COM. 1	COM. 2
46	C9	D9
47	C10	D10
48	C11	D11
49	C8	D8
50	C7	D7
51	C6	D6
52	A10	B10
53	A11	B11
54	A8	B8
55	A7	B7
56	A6	B6
57	COM. 1	
58		COM. 2

SCHEMATIC DIAGRAM (TAPE DECK AMPLIFIER)

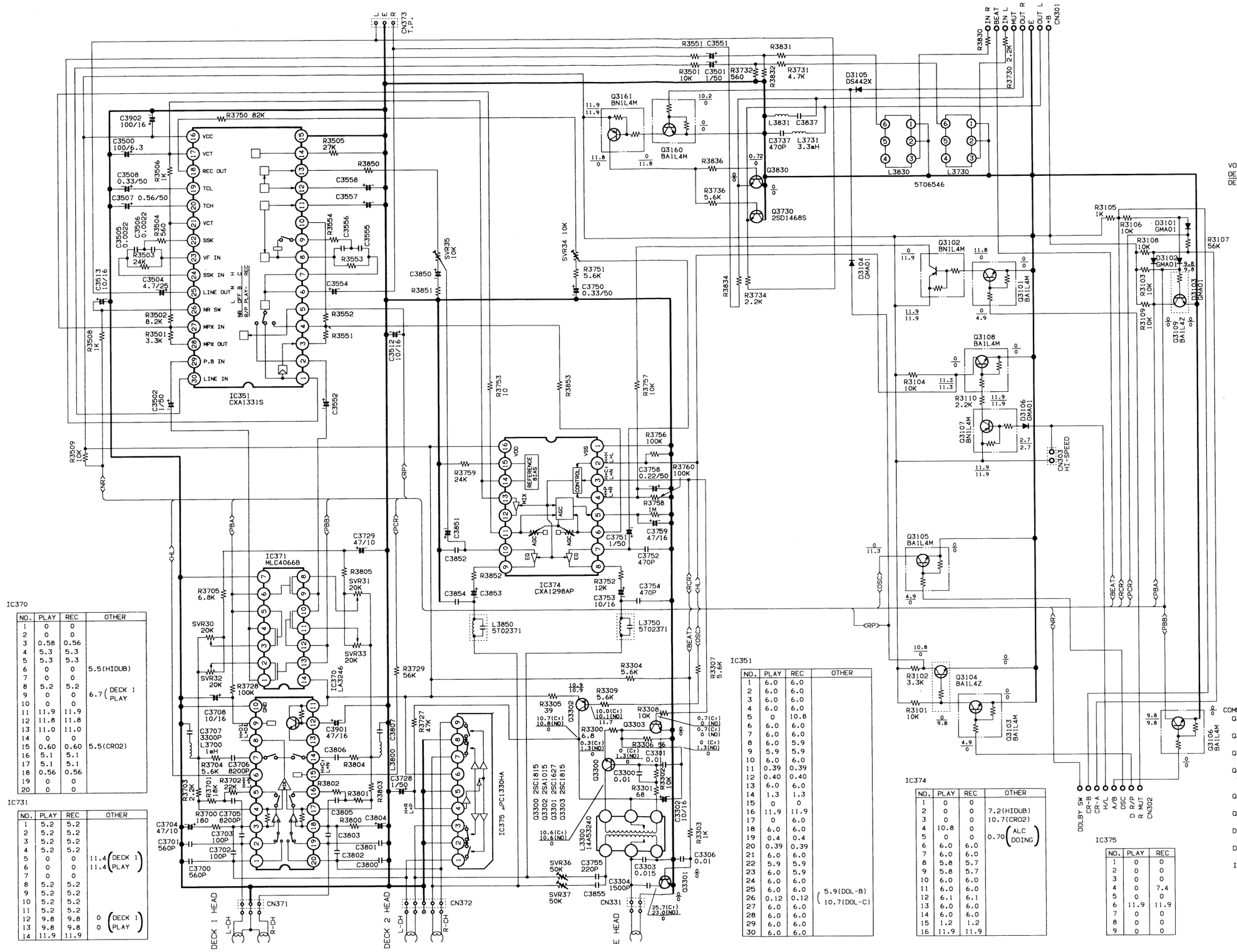

IC370

NO.	PLAY	REC	OTHER
1	0	0	
2	0	0	
3	0.58	0.56	
4	5.3	5.3	
5	5.3	5.3	
6	0	0	5.5(HIDUB)
7	0	0	
8	5.2	5.2	
9	0	0	6.7 (DECK 1 PLAY)
10	0	0	
11	11.9	11.9	
12	11.8	11.8	
13	11.0	11.0	
14	0	0	
15	0.60	0.60	5.5(CRO2)
16	5.1	5.1	
17	5.1	5.1	
18	0.56	0.56	
19	0	0	
20	0	0	

IC731

NO.	PLAY	REC	OTHER
1	5.2	5.2	
2	5.2	5.2	
3	5.2	5.2	
4	5.2	5.2	
5	0	0	11.4 (DECK 1)
6	0	0	11.4 (PLAY)
7	0	0	
8	5.2	5.2	
9	5.2	5.2	
10	5.2	5.2	
11	5.2	5.2	
12	9.8	9.8	0 (DECK 1)
13	9.8	9.8	0 (PLAY)
14	11.9	11.9	

IC351

NO.	PLAY	REC	OTHER
1	6.0	6.0	
2	6.0	6.0	
3	6.0	6.0	
4	6.0	6.0	
5	0	10.8	
6	6.0	6.0	
7	6.0	6.0	
8	6.0	5.9	
9	5.9	5.9	
10	6.0	6.0	
11	0.39	0.39	
12	0.40	0.40	
13	6.0	6.0	
14	1.3	1.3	
15	0	0	
16	11.9	11.9	
17	0	6.0	
18	6.0	6.0	
19	0.4	0.4	
20	0.39	0.39	
21	6.0	6.0	
22	5.9	5.9	
23	6.0	5.9	
24	6.0	6.0	
25	6.0	6.0	
26	0.12	0.12	(5.9(DOL-B) 10.7(DOL-C)
27	6.0	6.0	
28	6.0	6.0	
29	6.0	6.0	
30	6.0	6.0	

IC374

NO.	PLAY	REC	OTHER
1	0	0	
2	0	0	7.2(HIDUB)
3	0	0	10.7(CRO2)
4	10.8	0	0.70 (ALC DOING)
5	0	0	
6	6.0	6.0	
7	6.0	6.0	
8	5.8	5.7	
9	5.8	5.7	
10	6.0	6.0	
11	6.0	6.0	
12	6.1	6.1	
13	6.0	6.0	
14	6.0	6.0	
15	1.2	1.2	
16	11.9	11.9	

IC375

NO.	PLAY	REC
1	0	0
2	0	0
3	0	0
4	0	7.4
5	0	0
6	11.9	11.9
7	0	0
8	0	0
9	0	0

COMMON USE
- Q3300
  - 2SC1815 or 2SC945
- Q3303
  - 2SC1815 or 2SC945 or 2SC1740S
- Q3302
  - 2SA1015 or 2SA733
- Q3101 3103 3105 3106 3108 3160
  - DTC144ES or RN1204 or BA1L4M
- Q3102 3107 3161
  - DTA144ES or RN2204 or BN1L4M
- Q3104 3109
  - DTC144TS or BA1L4Z
- D3101 3102 3103 3104 3105
  - GMA01 or 1SS133
- D3105
  - DS442X or 1S2473
- IC371
  - MLC4066B or TC4066BP or BU4066B or μPD4066BC

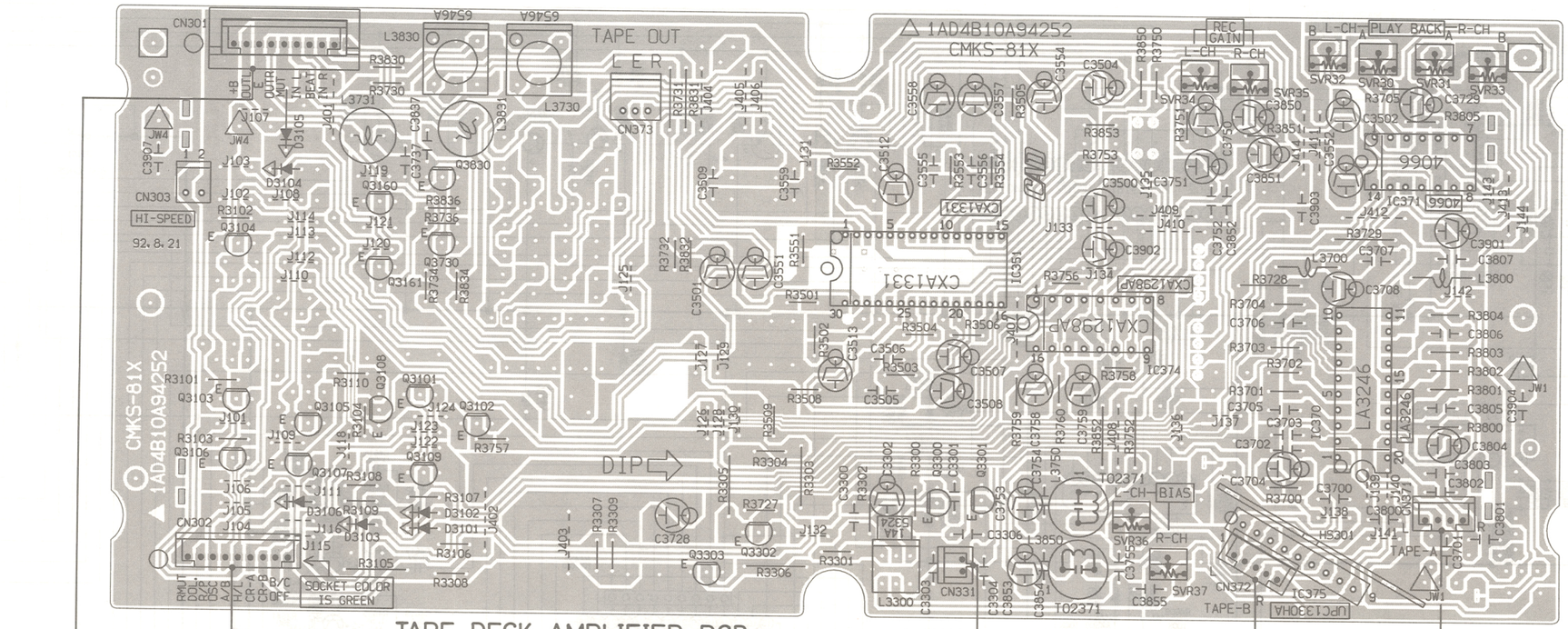
TAPE OUT
CMKS-81X
1AD4B10A94252
TAPE DECK AMPLIFIER PCB
REC GAIN
PLAY BACK
L-CH
R-CH
BIAS
TAPE-A
TAPE-B
LA3246
UPC1330HA
CXA1331
CXA1298AP
HI-SPEED
92.8.21
SOCKET COLOR IS GREEN
DIP
CN301
CN302
CN303
CN331
CN372
CN371
CN373
TO PRE AMPLIFIER PCB (CN301)
TO POWER AMPLIFIER PCB (CN302)

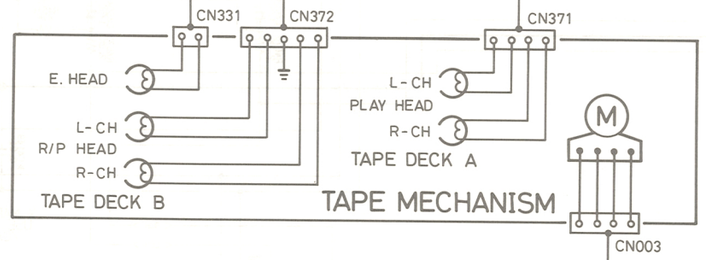
CN331
CN372
CN371
E. HEAD
L-CH
R/P HEAD
R-CH
TAPE DECK B
L-CH
PLAY HEAD
R-CH
TAPE DECK A
TAPE MECHANISM
M
CN003

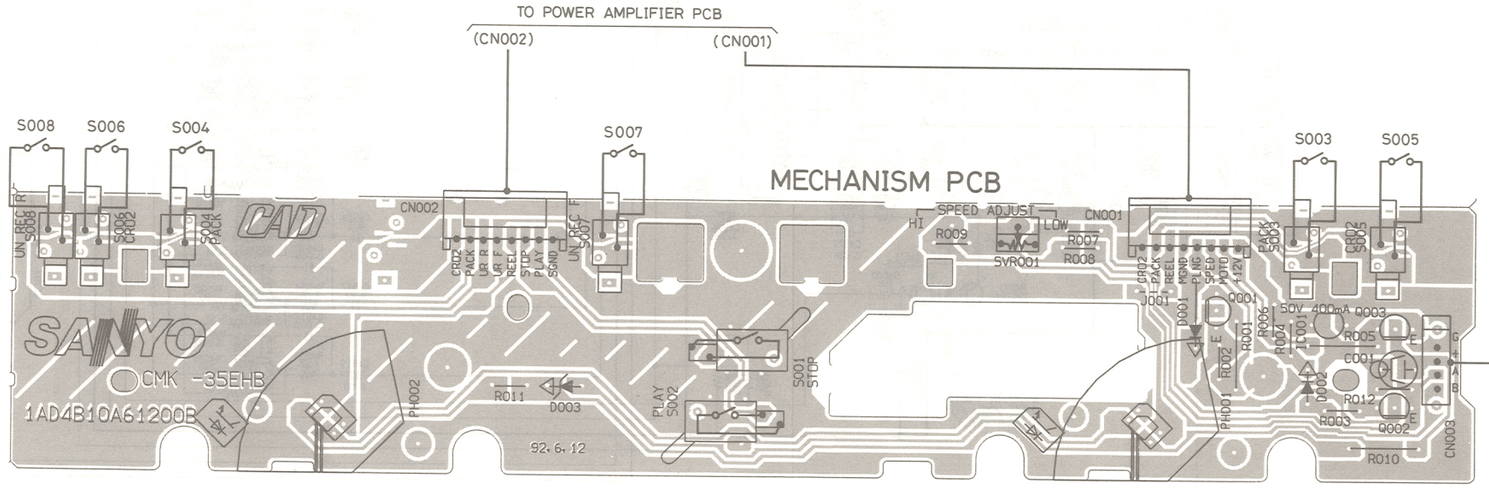
TO POWER AMPLIFIER PCB
(CN002)
(CN001)
MECHANISM PCB
S008
S006
S004
S007
S003
S005
SPEED ADJUST
SANYO
CMK -35EHB
1AD4B10A61200B
92.6.12
CN002
CN001
CN003

SCHEMATIC DIAGRAM (PRE-AMPLIFIER)

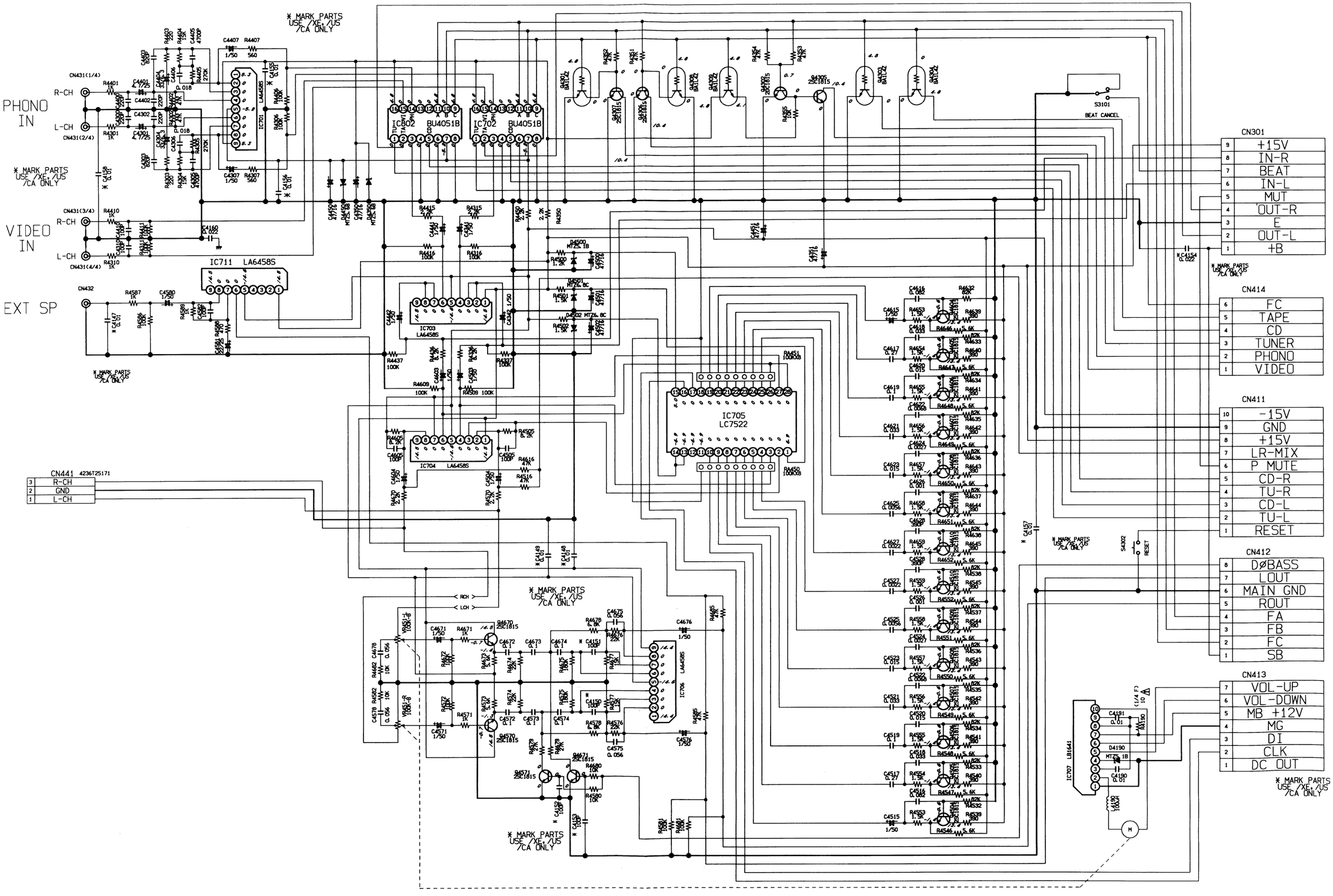

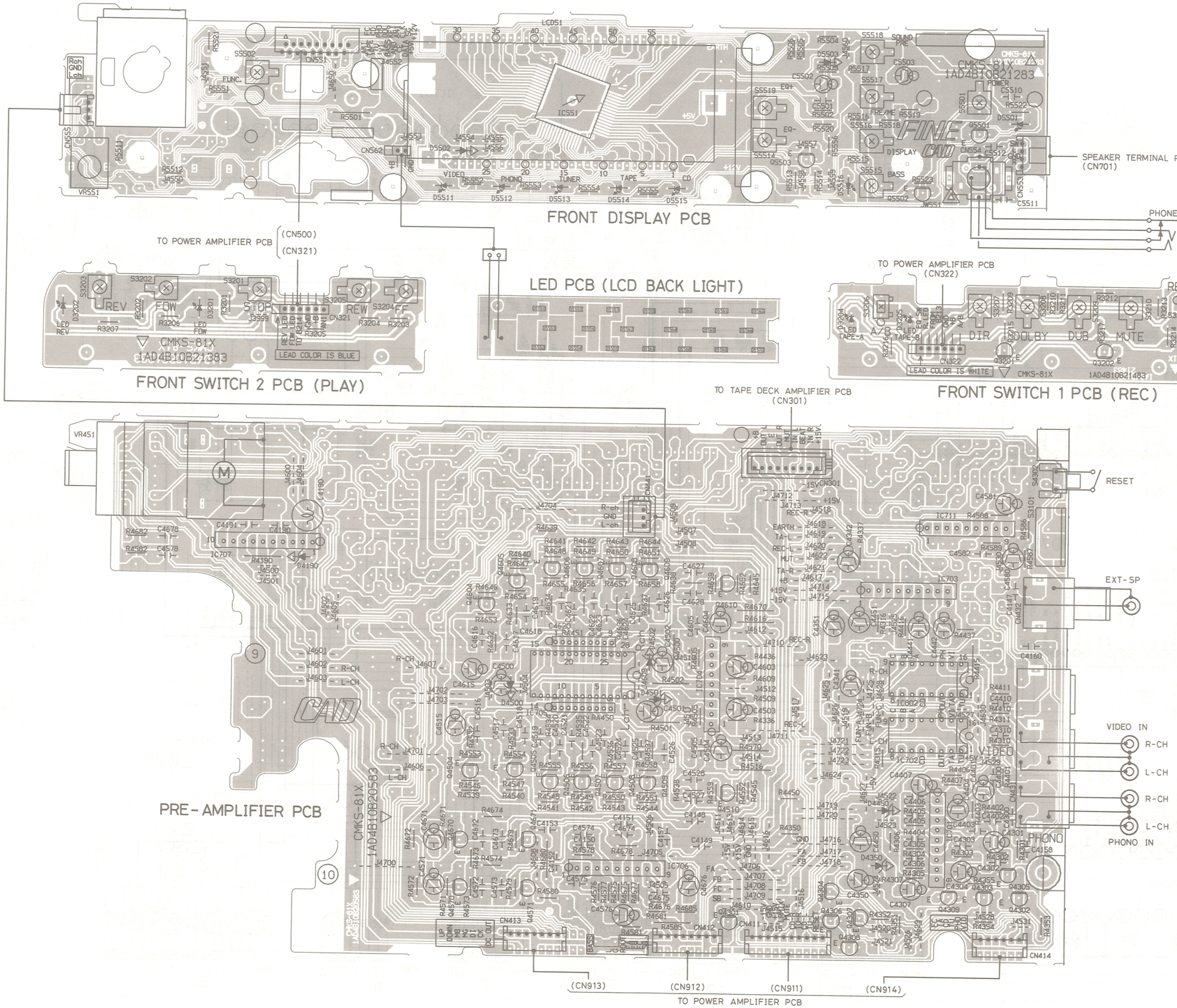
FRONT DISPLAY PCB
SPEAKER TERMINAL PCB (CN701)
PHONE
TO POWER AMPLIFIER PCB (CN500) (CN321)
LED PCB (LCD BACK LIGHT)
TO POWER AMPLIFIER PCB (CN322)
FRONT SWITCH 2 PCB (PLAY)
FRONT SWITCH 1 PCB (REC)
TO TAPE DECK AMPLIFIER PCB (CN301)
RESET
EXT-SP
VIDEO IN
R-CH
L-CH
R-CH
L-CH
PHONO IN
PRE-AMPLIFIER PCB
(CN913)
(CN912)
(CN911)
(CN914)
TO POWER AMPLIFIER PCB

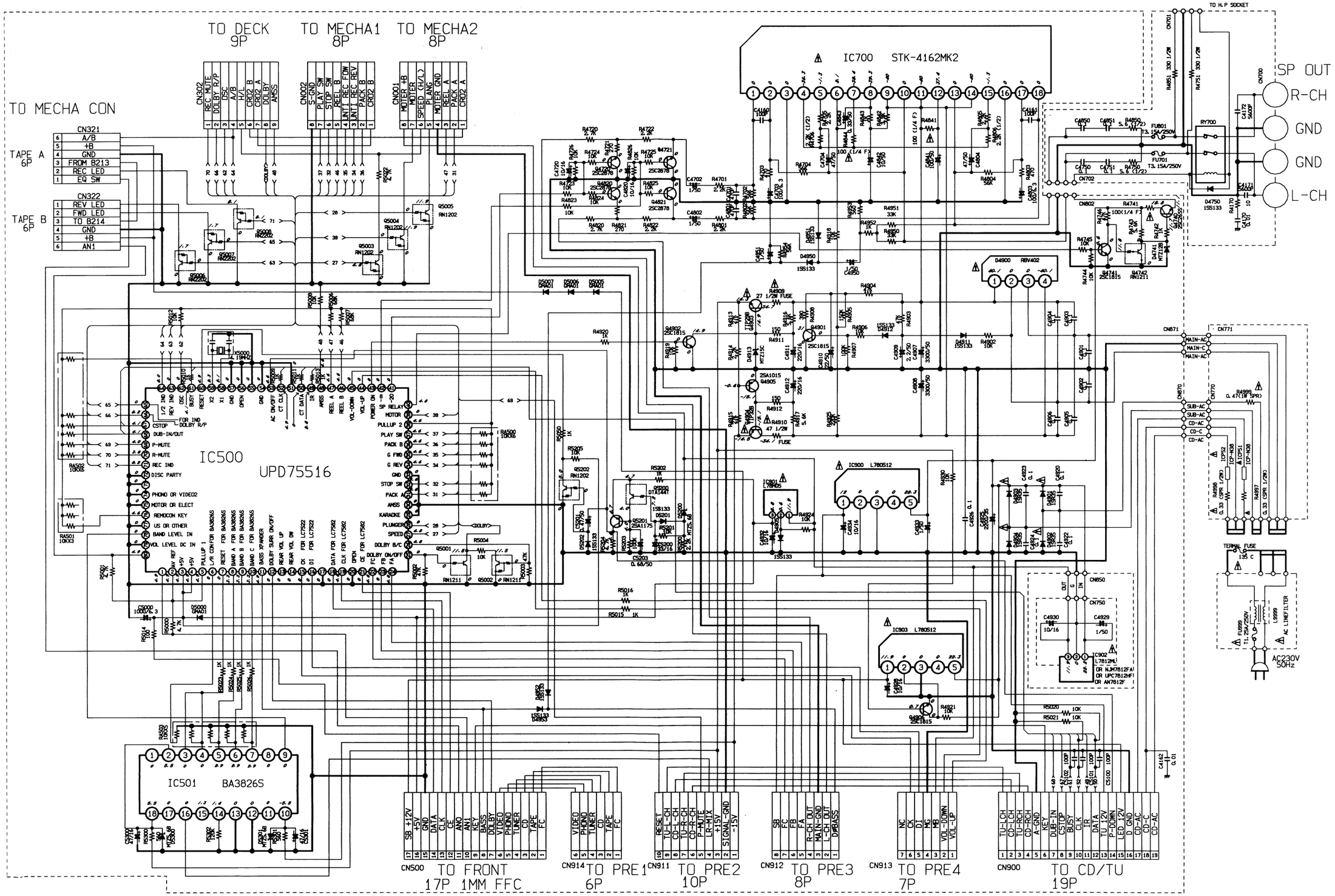
TO FRONTPCB
TO DECK 9P
TO MECHA1 8P
TO MECHA2 8P
TO MECHA CON
TAPE A 6P
TAPE B 6P
CN321
A/B
+B
GND
FROM B213
REC LED
EQ SW
CN322
REV LED
FWD LED
TO B214
GND
+B
AN1
CN302
REC MUTE
DOLBY R/P
OSC
A/B
H/L
CRO2 B
CRO2 A
DOLBY
AMSS
CN002
S-GND
PLAY SW
STOP SW
REEL B
UNIT1 REC FOW
UNIT1 REC REV
PACK B
CRO2 B
CN001
MOTER +B
MOTER
SPEED (H/L)
PLANG
MOTER GND
REEL A
PACK A
CRO2 A
IC500
UPD75516
IC501 BA3826S
IC700 STK-4162MK2
IC900 L780S12
IC903 L780S12
IC902 L7812CV
OR NJM7812FA
OR UPC7812HF1
OR AN7812F
SP OUT
R-CH
GND
GND
L-CH
TO H.P SOCKET
CN700
CN701
RY700
FU801 T3. 15A/250V
FU701 T3. 15A/250V
D4750 1SS133
D4900 RBV402
TERMAL FUSE 135 C
AC230V 50Hz
AC LINEFILTER
CN500 TO FRONT 17P 1MM FFC
CN914 TO PRE1 6P
CN911 TO PRE2 10P
CN912 TO PRE3 8P
CN913 TO PRE4 7P
CN900 TO CD/TU 19P

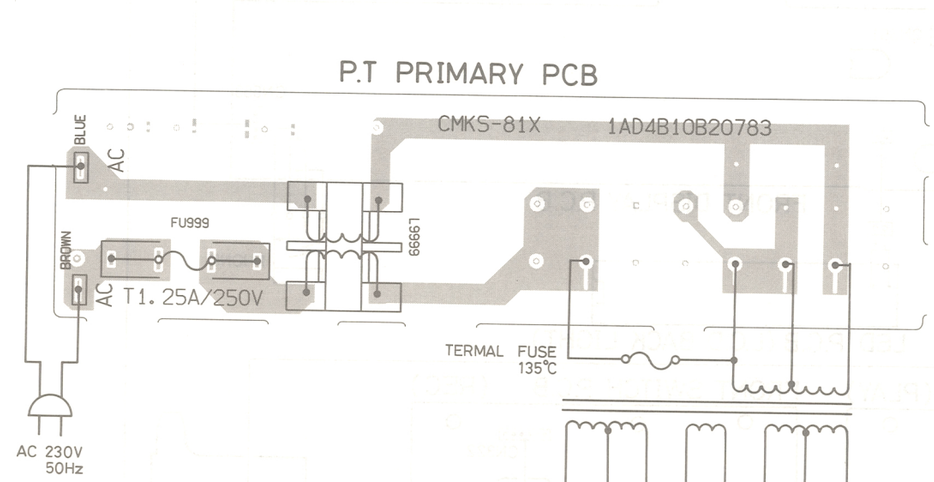
P.T PRIMARY PCB
CMKS-81X
1AD4B10B20783
BLUE
AC
FU999
BROWN
AC
T1.25A/250V
L6999
TERMAL FUSE
135°C
AC 230V
50Hz

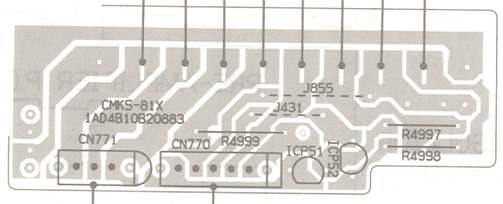
P.T SECONDARY
PCB
CMKS-81X
1AD4B10B20883
J855
J431
CN771
CN770
R4999
IC951
R4997
R4998

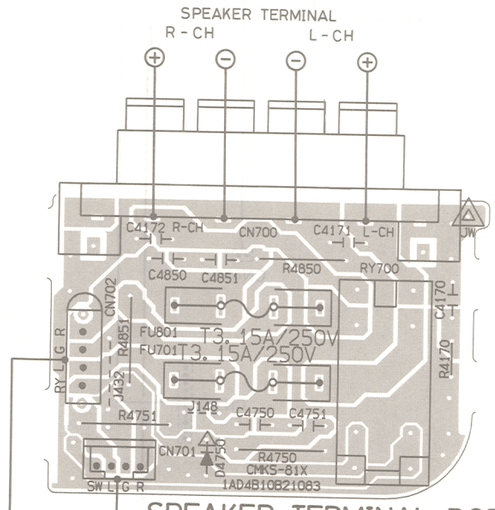
SPEAKER TERMINAL
R-CH
L-CH
C4172 R-CH
CN700
C4171 L-CH
C4850
C4851
R4850
RY700
C4170
CN702
FU801
T3.15A/250V
FU701
T3.15A/250V
R4851
R4852
J432
J148
R4751
C4750
C4751
R4470
CN701
R4750
CMKS-81X
1AD4B10B21083
SW LTG R
SPEAKER TERMINAL PCB
TO FRONT DISPLAY PCB
(CN553)

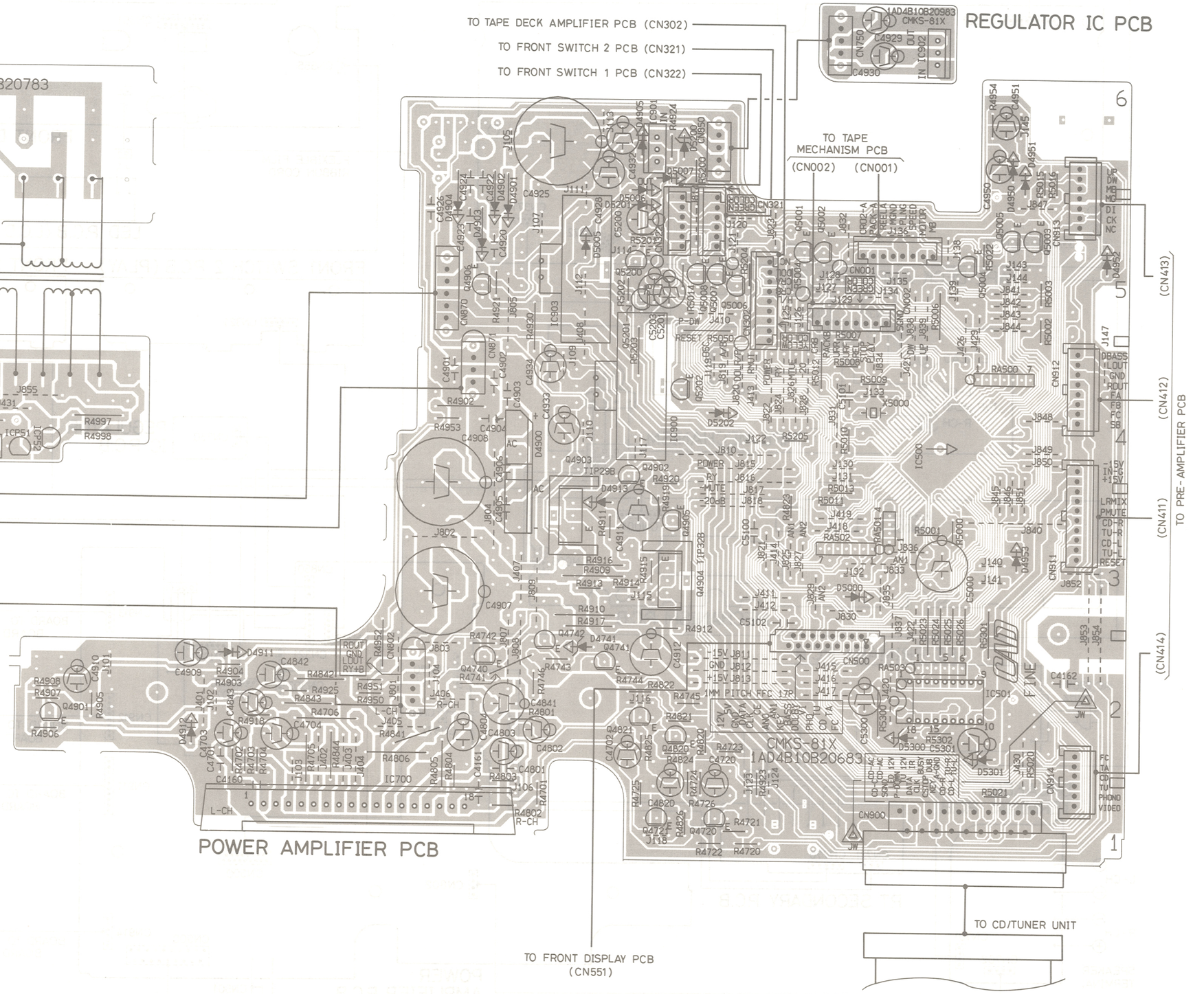
TO TAPE DECK AMPLIFIER PCB (CN302)
TO FRONT SWITCH 2 PCB (CN321)
TO FRONT SWITCH 1 PCB (CN322)
1AD4B10B20983
CMKS-81X
REGULATOR IC PCB
CN750
C4929
C4930
OUT
IN
IC902
TO TAPE
MECHANISM PCB
(CN002)
(CN001)
(CN413)
(CN412)
(CN411)
(CN414)
TO PRE-AMPLIFIER PCB
POWER AMPLIFIER PCB
CMKS-81X
1AD4B10B20683
TO FRONT DISPLAY PCB
(CN551)
TO CD/TUNER UNIT

WIRING CONNECTION (TAPE DECK / AMPLIFIER UNIT)

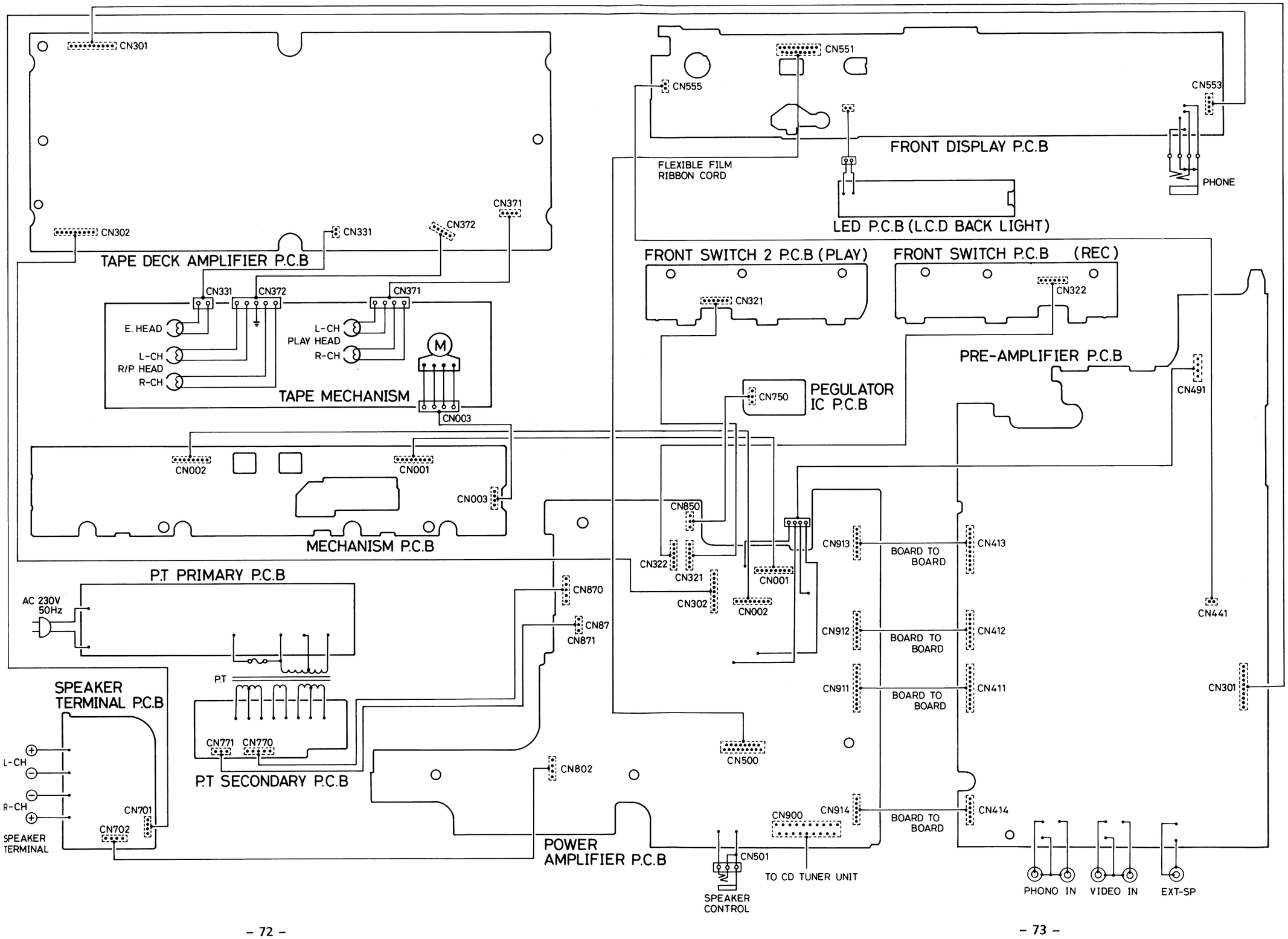

BLOCK DIAGRAM (TAPE DECK AMPLIFIER)

BLOCK DIAGRAM (PRE-AMPLIFIER)

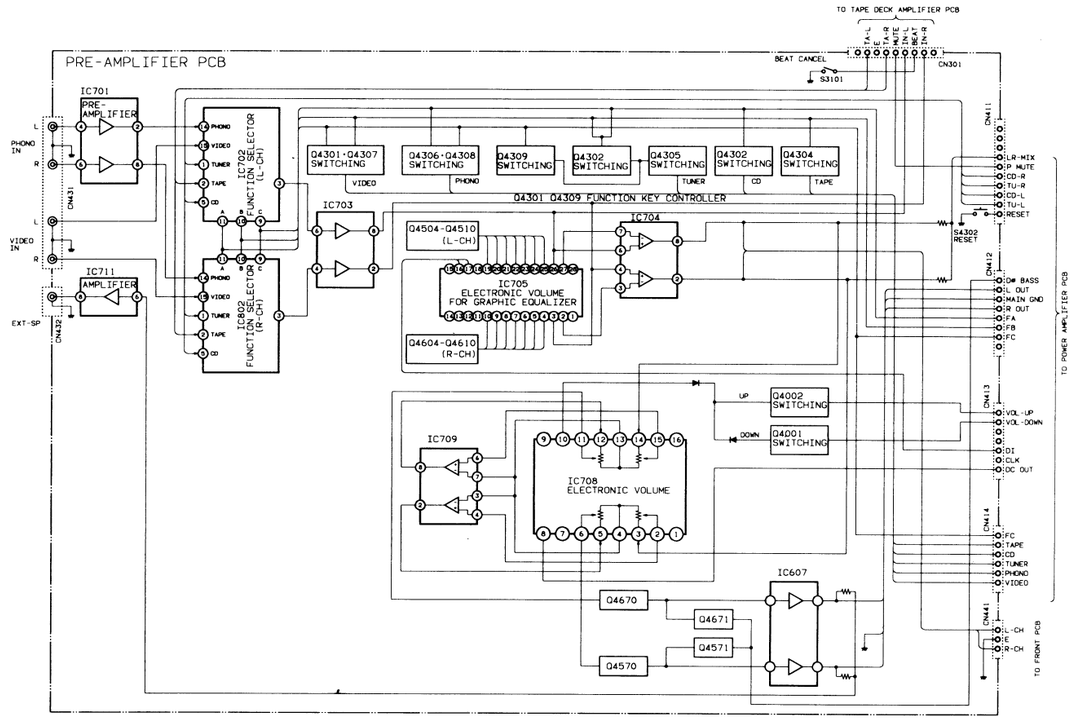

BLOCK DIAGRAM (FRONT)

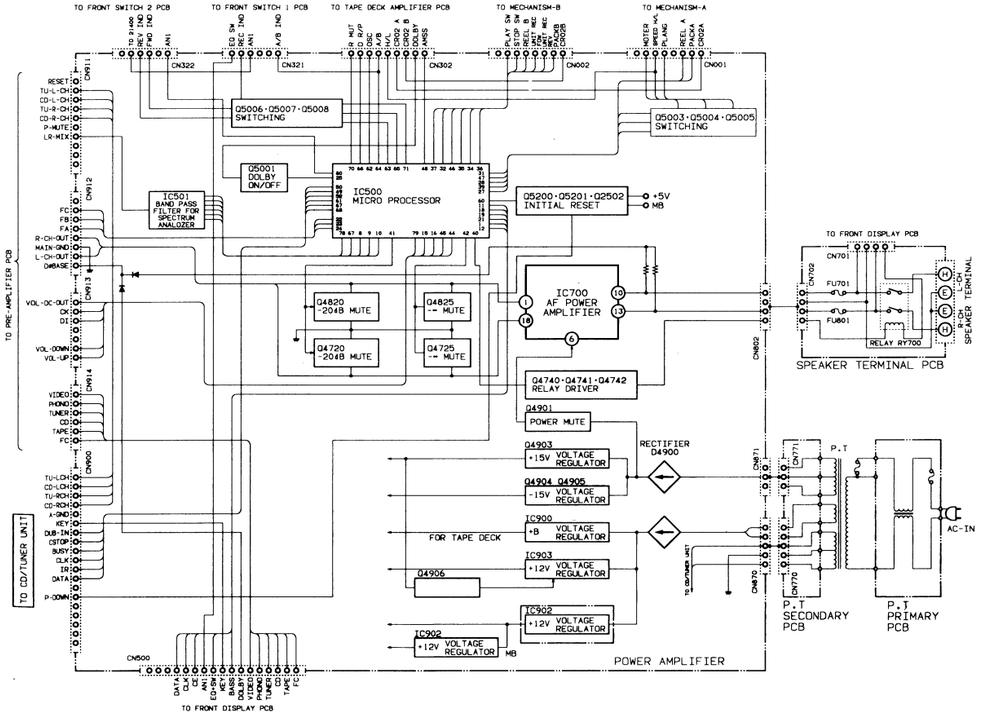

BLOCK DIAGRAM (SYSCON & POWER AMPLIFIER)

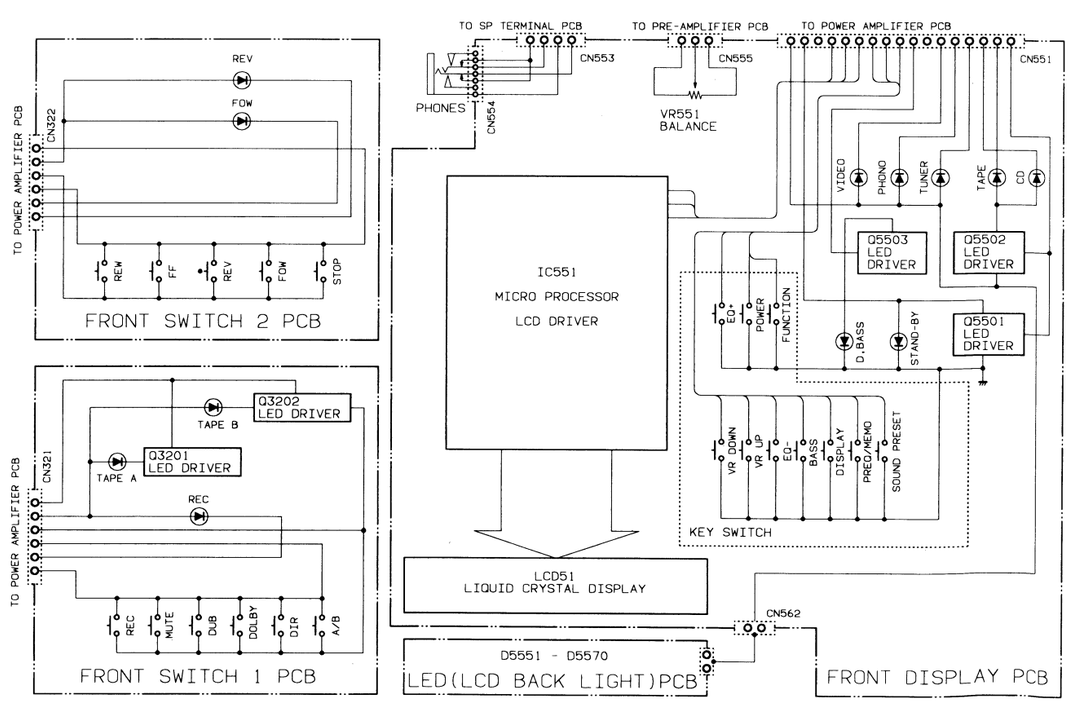

SCHEMATIC DIAGRAM (FRONT)

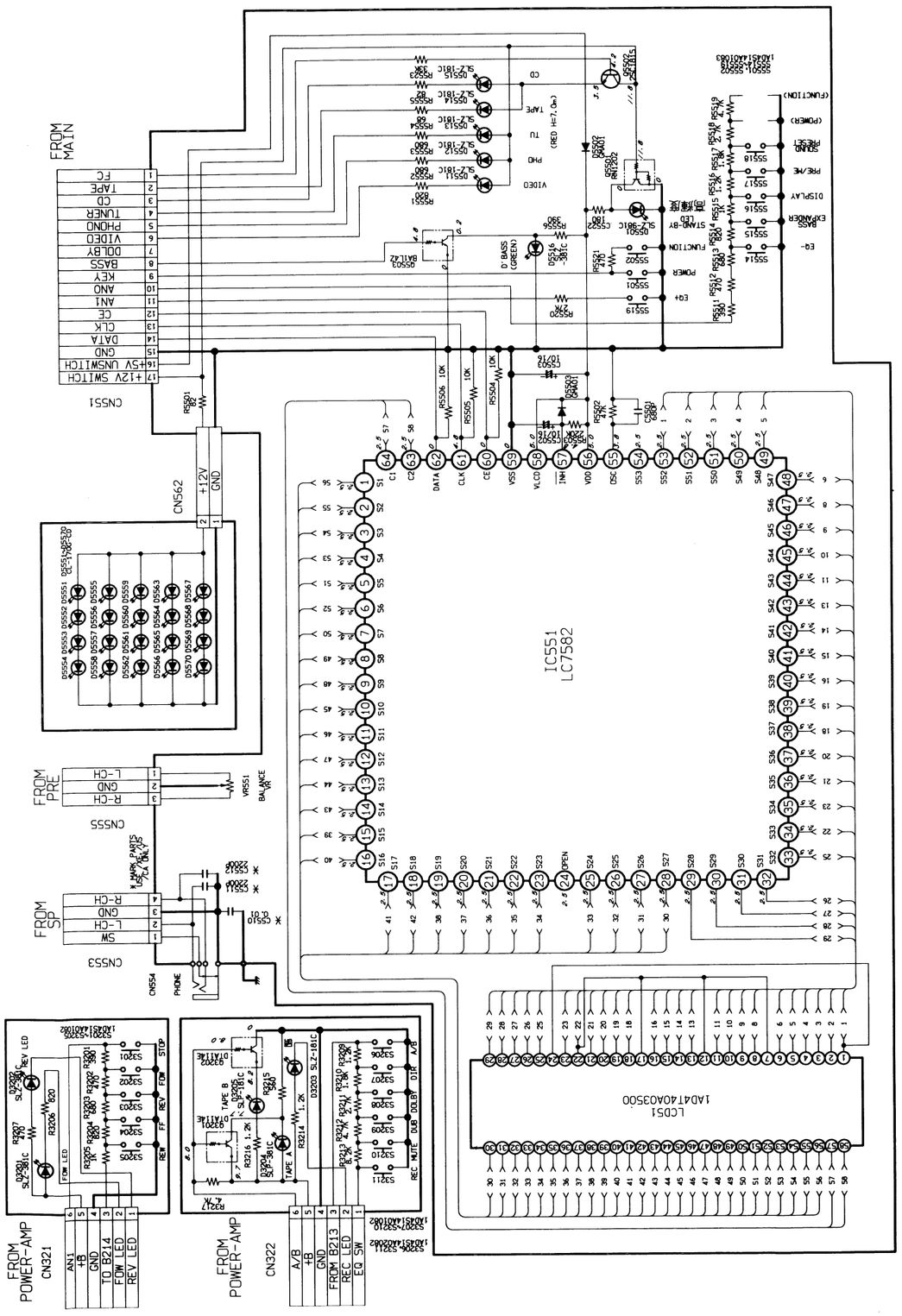

SCHEMATIC DIAGRAM (TAPE MECHANISM)

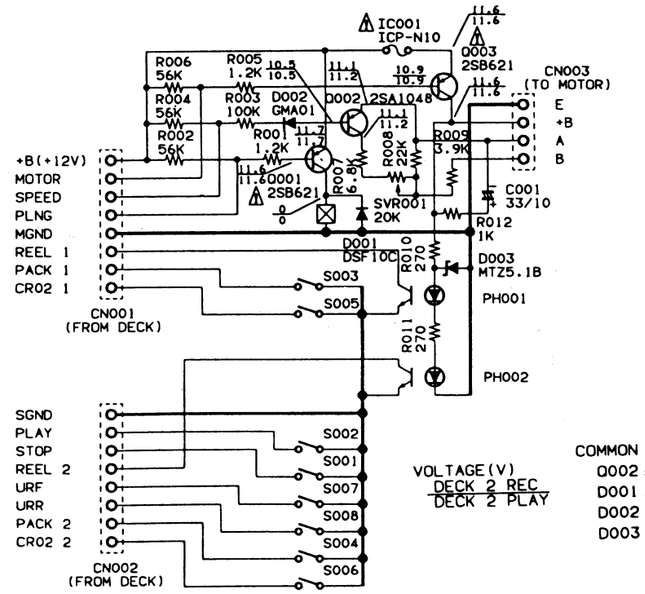

VOLTAGE(V)
DECK 2 REC
DECK 2 PLAY

COMMON USE
Q002 2SA1048 or 2SA933
D001 DSF10C or 1SR35
D002 GMA01 or 1SS133
D003 MTZ5.1B or GZS5.1Y

PH001 002
SPI33534C
S001 002
1AD4S12A02000
S003~008
1AD4S13A01800

S001 STOP SW
S002 PLAY SW
S003 DECK 1 PACK SW
S004 DECK 2 PACK SW
S005 DECK 1 CR02 SW
S006 DECK 2 CR02 SW
S007 DECK 2 UNREC F SW
S008 DECK 2 UNREC R SW

Unser FISHER-Team steht Ihnen jederzeit gerne zur Verfügung. Ersatzteilbestellungen wickeln Sie bitte ausschließlich mit unser Service-Zentrale München ab.
Senden Sie uns im Garantiefall Ihren Kaufbeleg ein. Bei unverkauften Lagergeräten des Fachhandels gilt als Garantienachweis ei eidesstattliche Versicherung mit eingetragener Modellbezeichnung und Geräte-Nummer oder ein Liefernachweis. Die gleiche Regelu besteht auch für Reparaturaufträge.
Bitte geben Sie unbedingt die Ersatzteil-Nummer und die Modellbezeichnung an.
Sie sparen so wertvolle Zeit. Vielen Dank.

Sep./'92/1500 NS Printed in Japan.